Polo Estate 1998 ➤

4-cyl. diesel engine, Mechanics									
Engine ID	AEY	AFN	AHB	AHU	AKW	ALE	1Y		

Edition 07.1998

satelettronica

Reproduction, copyright, copying for private or commercial purposes, in part or in whole, is not permitted unless authorised by Volkswagen AG. Volkswagen AG does not guarantee or accept any liability with respect to the correctness of information in this document. Copyright by Volkswagen AG.

List of Workshop Manual Repair GroupsList of Workshop Manual Repair GroupsList of Workshop Manual Repair Groups

Polo Estate 1998 ➤

4-cyl. diesel engine, Mechanics

Repair Group

00 - Technical data
10 - Removing and installing engine
13 - Crankshaft group
15 - Cylinder head, Valve gear
17 - Lubrication
19 - Cooling system
20 - Fuel supply system
21 - Charging
26 - Exhaust system

satelettronica

Protected by copyright. Copyright by Volkswagen AG. Volkswagen AG does not guarantee or accept any liability with respect to the correctness of information in this document. Copyright by Volkswagen AG. Not for private or commercial purposes, in part or in whole, is not permitted unless authorised by Volkswagen AG.

Technical information should always be available to the foremen and mechanics, because their careful and constant adherence to the instructions is essential to ensure vehicle road-worthiness and safety. In addition, the normal basic safety precautions for working on motor vehicles must, as a matter of course, be observed.

All rights reserved.
No reproduction without prior agreement from publisher.

Copyright © 2011 Volkswagen AG, Wolfsburg

Contents

00 - Technical data 1
1 Technical data 1
1.1 Technical data 1
1.2 Engine number 1
1.3 Engine data 1

10 - Removing and installing engine 3
1 Removing and installing engine 3
1.1 Removing and installing engine 3
1.2 Notes on removing 3
1.3 Notes on installing 5
1.4 Tightening torques 7
1.5 Assembly mountings 7
1.6 Renewing engine carrier rubber mounting 8
1.7 Additional information and removal instructions for vehicles with air conditioner 9

13 - Crankshaft group 11
1 Dismantling and assembling engine 11
1.1 Dismantling and assembling engine 11
1.2 Removing and installing ribbed belt 26
1.3 Removing and installing toothed belt 29
1.4 Checking semi-automatic toothed belt tensioning roller 35
1.5 Removing single part injection pump sprocket 36
2 Removing and installing sealing flange and pressure plate/flywheel/drive plate 37
2.1 Removing and installing sealing flange and pressure plate/flywheel/drive plate 37
2.2 Renewing crankshaft oil seal - pulley end - 40
3 Removing and installing crankshaft 42
3.1 Removing and installing crankshaft 42
3.2 Crankshaft dimensions 45
4 Dismantling and assembling pistons and conrods 46
4.1 Dismantling and assembling pistons and conrods 46
4.2 Checking piston projection at TDC 53
4.3 Piston and cylinder dimensions 54

15 - Cylinder head, Valve gear 55
1 Removing and installing cylinder head 55
1.1 Removing and installing cylinder head 55
1.2 Removing and installing cylinder head 60
1.3 Checking compressions 62
2 Servicing valve gear 65
2.1 Servicing valve gear 65
2.2 Reworking valve seats 71
2.3 Checking valve guides 73
2.4 Renewing valve guides 74
2.5 Renewing valve stem seals 74
2.6 Removing and installing camshaft 75
2.7 Checking hydraulic bucket tappets 77
2.8 Replacing swirl chambers 77

17 - Lubrication 79
1 Removing and installing parts of the lubrication system 79
1.1 Removing and installing parts of the lubrication system 79
1.2 Checking oil pressure and oil pressure switch 89

Protected by copyright. Copying for private or commercial purposes, in part or in whole, is not permitted unless authorised by Volkswagen AG. Volkswagen AG does not guarantee or accept any liability with respect to the correctness of information in this document. Copyright by Volkswagen AG.
satelettronica

1.3 Removing and installing oil sump cap . . . 90

19 - Cooling system . . . 92
1 Removing and installing parts of cooling system . . . 92
1.1 Removing and installing parts of cooling system . . . 92
1.2 Parts of cooling system body side . . . 93
1.3 Parts of cooling system engine side . . . 97
1.4 Dismantling and assembling coolant pump . . . 100
1.5 Draining and filling cooling system . . . 101
1.6 Removing and installing radiator and radiator fan . . . 103

20 - Fuel supply system . . . 105
1 Removing and installing parts of fuel supply system . . . 105
1.1 Removing and installing parts of fuel supply system . . . 105
1.2 Removing and installing fuel tank with its attachments, Polo Classic, Polo Estate . . . 106
1.3 Removing and installing fuel tank with its attachments, Caddy . . . 110
1.4 Servicing fuel filter . . . 115
1.5 Safety precautions when working on the fuel supply system . . . 117
1.6 Rules for cleanliness . . . 117
1.7 Removing and installing fuel tank . . . 117
1.8 Servicing accelerator mechanism . . . 119
1.9 Checking accelerator position sender . . . 124
1.10 Adjusting pedal position sender . . . 127

21 - Charging . . . 129
1 Charge air system with turbocharger . . . 129
1.1 Charge air system with turbocharger . . . 129
1.2 Safety precautions . . . 129
1.3 Rules for cleanliness . . . 129
1.4 Removing and installing turbocharger with attachments . . . 129
1.5 Removing and installing parts of charge air cooling system . . . 138
1.6 Exhaust gas turbocharger hose/pipe connections . . . 140
1.7 Removing and installing turbocharger . . . 142
2 Checking charge pressure system . . . 146
2.1 Checking charge pressure system . . . 146
2.2 Checking turbocharger . . . 146
2.3 Checking pressure unit for charge pressure regulating valve . . . 148
2.4 Removing and installing pressure unit for charge pressure regulating valve . . . 148
2.5 Checking charge pressure control . . . 149

26 - Exhaust system . . . 156
1 Removing and installing parts of exhaust system . . . 156
1.1 Removing and installing parts of exhaust system . . . 156
1.2 Front exhaust pipe and catalyst with its attachments . . . 157
1.3 Exhaust manifold, front exhaust pipe and catalyst with its attachments . . . 160
1.4 Silencer with mountings Caddy . . . 162
1.5 Silencer with mountings Polo Classic, Polo Estate . . . 165
2 Exhaust gas recirculation system, engine codes 1Y, AEY, AHB, AKW . . . 167
2.1 Exhaust gas recirculation system, engine codes 1Y, AEY, AHB, AKW . . . 167
2.2 Removing and installing parts of exhaust gas recirculation system . . . 168
2.3 Checking exhaust gas recirculation valve . . . 169
2.4 Checking exhaust gas recirculation . . . 169
2.5 Checking exhaust gas recirculation valve (N18) . . . 173
3 Exhaust gas recirculation system, engine codes AFN, AHU, ALE . . . 174
3.1 Exhaust gas recirculation system, engine codes AFN, AHU, ALE . . . 174
3.2 Removing and installing parts of exhaust gas recirculation system . . . 175
3.3 Vacuum hose connection diagram . . . 178

Copyright by Volkswagen AG. Volkswagen AG does not guarantee or accept any liability with respect to the correctness of information in this document. Copyright by Volkswagen AG. Protected by copyright. Copying for private and commercial purposes, in whole or in part, is not permitted unless authorised by Volkswagen AG.
satelettronica

3.4 Checking exhaust gas recirculation valve (mechanical) 180
3.5 Checking exhaust gas recirculation 181

Protected by copyright. Copying for private or commercial purposes, in part or in whole, is not permitted unless authorised by Volkswagen AG. Volkswagen AG does not guarantee or accept any liability with respect to the correctness of information in this document. Copyright by Volkswagen AG.

satelettronica

Protected by copyright. Copying for private or commercial purposes, in part or in whole, is not permitted unless authorised by Volkswagen AG. Volkswagen AG does not guarantee or accept any liability with respect to the correctness of information in this document. Copyright by Volkswagen AG.

satelettronica

00 - Technical data

1 - Technical data

1.1 - Technical data

1.2 - Engine number

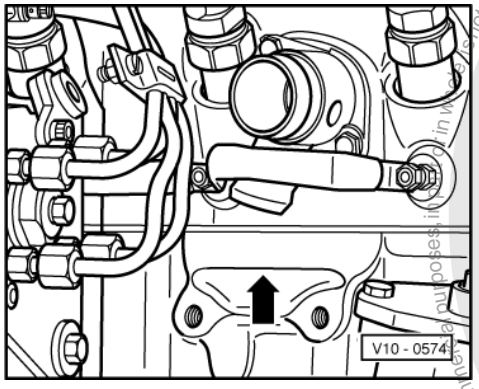

-> The engine number ("Code letters" and "Serial number") can be found between injection pump and vacuum pump on cylinder block.

Additionally there is a sticker on the toothed belt guard with "Engine code" and "Serial number".

The engine code is also included on the vehicle data plate.

1.3 - Engine data

Code letters		AEY	AFN	AHB	AHU
Manufactured		11.95 ▸	06.98 ▸	07.96 ▸	01.97 ▸
Capacity	ltr.	1.9	1.9	1.7	1.9
Output	kW at rpm	47/4200	81/4150	42/4200	66/4000
Torque	Nm at rpm	125/2200...2800	235/1900	112/2200...2600	202/1900
Bore	ø mm	79.5	79.5	79.5	79.5
Stroke	mm	95.5	95.5	86.4	95.5
Compression ratio		19.5:1	19.5:1	19.5:1	19.5:1
CN	min.	49	49	49	49
Firing order		1-3-4-2	1-3-4-2	1-3-4-2	1-3-4-2
Catalyst		x	x	x	x
Exhaust gas recirculation		x	x	x	x
Charging		-	x	-	x
Charge air cooling		-	x	-	x
Exhaust emissions fulfil		-	-	-	-

Protected by copyright. Copying for private or commercial purposes, in whole or in part, is not permitted unless authorised by Volkswagen AG. Volkswagen AG does not guarantee or accept any liability with respect to the correctness of information in this document. Copyright by Volkswagen AG.
satelettronica

Code letters		AKW	ALE	1Y
Manufactured		11.97 ▸	11.97 ▸	11.95 ▸
Capacity	ltr.	1.7	1.9	1.9
Output	kW at rpm	44/4250	66/3750	47/4400
Torque	Nm at rpm	112/2200...2600	210/1900	124/2000...3000
Bore	ø mm	79.5	79.5	79.5
Stroke	mm	86.4	95.5	95.5
Compression ratio		19.5:1	19.5:1	22.5:1
CN	min.	49	49	49
Firing order		1-3-4-2	1-3-4-2	1-3-4-2
Catalyst		x	x	x
Exhaust gas recirculation		x	x	x
Charging		-	x	-
Charge air cooling		-	x	-
Exhaust emissions fulfil		D3 standard	D3 standard	-

Protected by copyright. Copying for private or commercial purposes, in part or in whole, is not permitted unless authorised by Volkswagen AG. Volkswagen AG does not guarantee or accept any liability with respect to the correctness of information in this document. Copyright by Volkswagen AG.

satelettronica

10 - Removing and installing engine

1 - Removing and installing engine

1.1 - Removing and installing engine

Special tools, workshop equipment, testers, measuring instruments and auxiliary items required

- Drip tray V.A.G 1306
- Pliers V.A.G 1921 for spring type clips
- Lifting tackle 2024 A
- Grease G 000 100 (vehicles with manual gearbox)
- V.A.G 1331 Torque wrench (5...50 Nm)
- V.A.G 1332 Torque wrench (40...200 Nm)
- Cable tie

1.2 - Notes on removing

- First check whether a coded radio is fitted. If this is the case obtain the anti-theft coding.
- The engine is removed forwards together with the gearbox.
- With ignition switched off disconnect battery earth strap.
- All cable ties which are opened or cut open when removing engine, must be replaced in the same position when installing engine.
- Drain coolant => Page 101

Vehicles with air conditioner:

- Observe additional information and removal instructions => Page 9 .

Continuation for all vehicles

- Removing lock carrier with attachments:

=> General body repairs; Repair group 50; Body, front; Removing and installing lock carrier with attachments. Body, front Removing and installing lock carrier with attachments.

- Remove air cleaner housing complete.
- Disconnect fuel supply and return pipes at fuel filter.

Engine codes AFN, AHU, ALE

- Remove connecting pipe between charged air cooler and intake manifold pressure hose.

Continued for all engine codes

- Remove ribbed belt => Page 26 .

Vehicles with manual gearbox

With cable operated clutch:

- Disconnect clutch cable:

=> 5-Speed manual gearbox 020; Repair group 30; Servicing clutch control; removing and installing clutch cable Servicing clutch control removing and installing clutch cable

Protected by copyright. Copying for private or commercial purposes, in part or in whole, is not permitted unless authorised by Volkswagen AG. Volkswagen AG does not guarantee or accept any liability with respect to the correctness of information in this document. Copyright by Volkswagen AG.
satelettronica

With hydraulically operated clutch:

- Remove hydraulic clutch slave cylinder:

=> 5-Speed manual gearbox 02A; Repair group 30; Servicing clutch release mechanism Servicing clutch release mechanism

- Disconnect selector mechanism from gearbox.

=> 5-Speed manual gearbox 02A; Repair group 34; Servicing selector mechanism Servicing selector mechanism

Engine code 1Y

- Disconnect throttle cable at injection pump lever, remove securing clip on support bracket and release throttle cable.

Continued for all engine codes

- Disconnect all coolant, vacuum and breather hoses from engine.
- Disconnect all electric wires from gearbox, alternator and starter and move clear.

Engine codes AFN, AHU, ALE

- Unscrew front exhaust pipe from turbocharger.

Continued for all engine codes

- Disconnect exhaust pipe.
- Remove right-hand drive shaft and unbolt left-hand drive shaft and tie up.

Vehicles with power assisted steering:

- Remove power assisted steering vane pump and secure to cross member with wire; hoses remain connected:

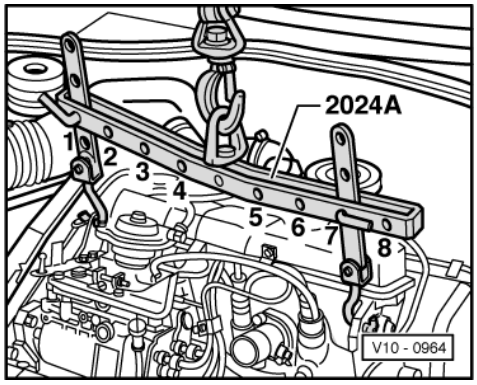

=> Running gear; Repair group 48; Assembly overview: vane pump, reservoir, hydraulic lines; Removing and installing power steering vane pump. Assembly overview: vane pump, reservoir, hydraulic lines Removing and installing power steering vane pump.

- Tie-up power steering reservoir.

- -> Attach lifting tackle 2024A as follows and lift slightly with workshop crane:

  Pulley end:
  2nd hole in hook at position 1
  Flywheel end:
  2nd hole in hook at position 7

Protected by copyright. Copying for private or commercial purposes, in part or in whole, is not permitted unless authorised by Volkswagen AG. Volkswagen AG does not guarantee or accept any liability with respect to the correctness of information in this document. Copyright by Volkswagen AG.
satelettronica

Warning!
The hooks and locating pins must be secured with locking pins.

Notes:

- The positions marked 1...4 on the bar must be towards the pulley end.
- The holes in the hook rails are counted up from the hook.

- Lever out assembly forwards.

Note:

When the assembly is lifted off, it must be carefully guided to prevent damage to the bodywork.

When working on the engine, it should be secured to the engine stand using the engine bracket VW 540.

1.3 - Notes on installing

Installation is carried out in the reverse sequence, when doing this note the following:

With cable operated clutch:

- Lightly grease input shaft splines with G 000 100.

With hydraulically operated clutch:

- Check clutch release bearing for wear, renew if necessary.
- Lightly grease clutch release bearing, release bearing guide sleeve and splines on input shaft with G 000 100.

Both versions:

- Check whether the dowel sleeves for centring engine/gearbox are in the cylinder block and install if necessary.
- When lowering the assembly, ensure that clearance exists between assembly and drive shafts.

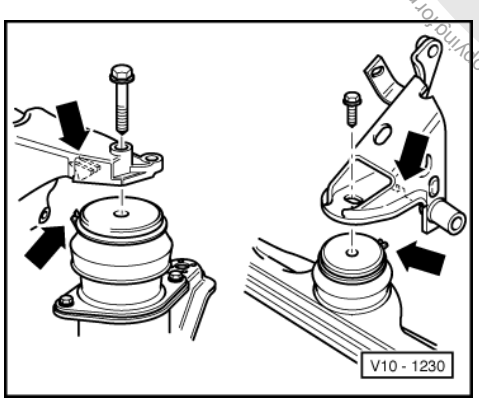

- -> When installing the engine mounting ensure that the recess on the rear console and the recess on the front console locates on the lugs of the bonded rubber mounting -arrows-.
- Align engine mountings stress-free by rocking.

With cable operated clutch:

- Install clutch cable:

Protected by copyright. Copying for private or commercial purposes, in part or in whole, is not permitted unless authorised by Volkswagen AG. Volkswagen AG does not guarantee or accept any liability with respect to the correctness of information in this document. Copyright by Volkswagen AG.
satelettronica

=> 5-Speed manual gearbox 020; Repair group 30; Servicing clutch control; removing and installing clutch cable Servicing clutch control removing and installing clutch cable

With hydraulically operated clutch:

- Install hydraulic clutch slave cylinder:

=> 5-Speed manual gearbox 02A; Repair group 30; Servicing clutch release mechanism Servicing clutch release mechanism

- Install gear selector mechanism:

=> 5-Speed manual gearbox 02A; Repair group 34; Servicing selector mechanism Servicing selector mechanism

- If necessary adjust selector cables:

=> 5-Speed manual gearbox 02A; Repair group 34; Servicing selector mechanism Servicing selector mechanism

Both versions:

- Installing lock carrier with attachments:

=> General body repairs; Repair group 50; Body front; Servicing lock carrier with attachments Body front Servicing lock carrier with attachments

Engine codes AFN, AHU, ALE

- Installing air conditioner compressor:

=> Heating, air conditioning; Repair group 87; Air conditioning; Removing and installing compressor bracket - 4-cyl. diesel engine Air conditioning Removing and installing compressor bracket - 4-cyl. diesel engine

Continued for all engine codes

- Installing air conditioner compressor:

=> Heating, air conditioning; Repair group 87; Air conditioning; Removing and installing compressor bracket - 4-cyl. diesel engine Air conditioning Removing and installing compressor bracket - 4-cyl. diesel engine

Vehicles with power assisted steering:

- Install power assisted steering vane pump:

=> Running gear; Repair group 48; Assembly overview: vane pump, reservoir, hydraulic lines; Removing and installing power steering vane pump. Assembly overview: vane pump, reservoir, hydraulic lines Removing and installing power steering vane pump.

- Electrical connections and routing:

=> Current flow diagrams, Electrical fault finding and Fitting locations

- Install ribbed V-belt => Page 26 .
- Filling with coolant => Page 101
- Servicing accelerator mechanism => Page 119
- Check headlight adjustment and adjust if necessary:

=> Maintenance

Engine code 1Y

Protected by copyright. Copying for private or commercial purposes, in part or in whole, is not permitted unless authorised by Volkswagen AG. Volkswagen AG does not guarantee or accept any liability with respect to the correctness of information in this document. Copyright by Volkswagen AG.
satelettronica

Note:

Do not interchange fuel supply and fuel return pipe union bolts. Return union bolt has a smaller hole and is marked "OUT" on hexagon head.

1.4 - Tightening torques

Bolted connection		Tightening torque
Engine to gearbox	M10	60 Nm
	M12	80 Nm
Drive shafts to flanged shafts		45 Nm
Front exhaust pipe to turbocharger		25 Nm
Exhaust pipe to manifold		40 Nm
Engine carrier to body		60 Nm

1.5 - Assembly mountings

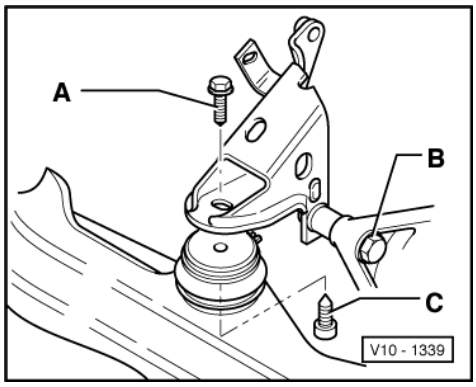

Tightening torques

(Bolts oiled)

-> Front assembly mounting

A = 55 Nm
B = 45 Nm
C = 55 Nm

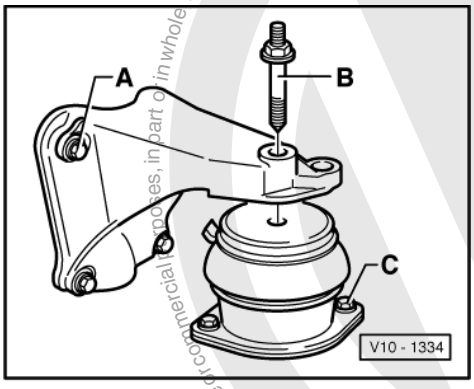

satelettronica
Protected by copyright. Copying for private or commercial purposes, in part or in whole, is not permitted unless authorised by Volkswagen AG. Volkswagen AG does not guarantee or accept any liability with respect to the correctness of information in this document. Copyright by Volkswagen AG.

-> Rear right assembly mounting

A = 25 Nm
B = 60 Nm
C = 30 Nm

Engine codes AFN, AHU, AKW, ALE

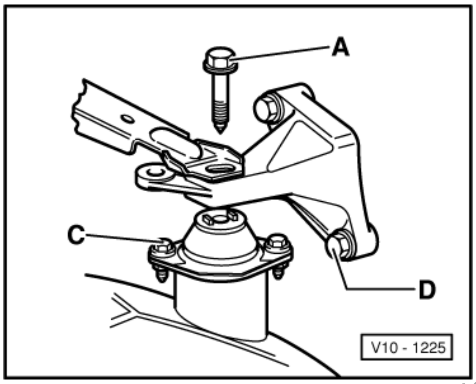

-> Rear left engine mounting

A = 50 Nm
C = 25 Nm
D = 25 Nm

Continuation for all vehicles

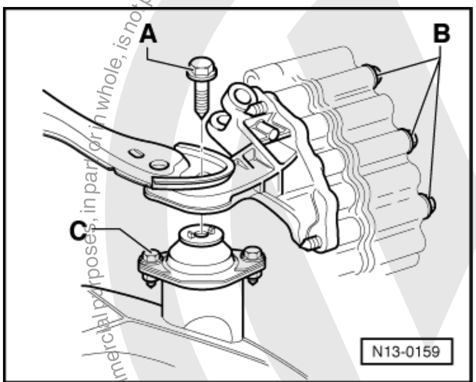

-> Rear left engine mounting

A = 60 Nm
B = 35 Nm
C = 30 Nm

Protected by copyright. Copying for private or commercial purposes, in part or in whole, is not permitted unless authorised by Volkswagen AG. Volkswagen AG does not guarantee or accept any liability with respect to the correctness of information in this document. Copyright by Volkswagen AG.

1.6 - Renewing engine carrier rubber mounting

Special tools, workshop equipment, testers, measuring instruments and auxiliary items required

- Engine support bracket 10-222A with legs 10-222A/1
- Peening tool 3302
- Press tool VW 432

Work sequence

- Fit engine support bracket 10-222A with legs 10-222A/1.

satelettronica

- Locate support bracket in lifting eye on left of cylinder head and take-up weight of engine.
- Remove engine carrier.

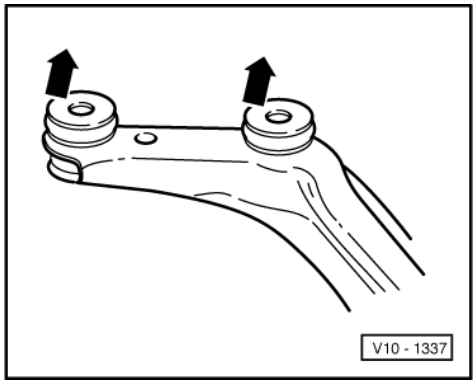

- -> Lever off washers from the spacer sleeves with pliers (replace any washers which are damaged e.g. bent washers).
- Pull out spacer sleeves and detach rubber mounting.
- Fit new rubber mounting and insert spacer sleeves as far as possible.

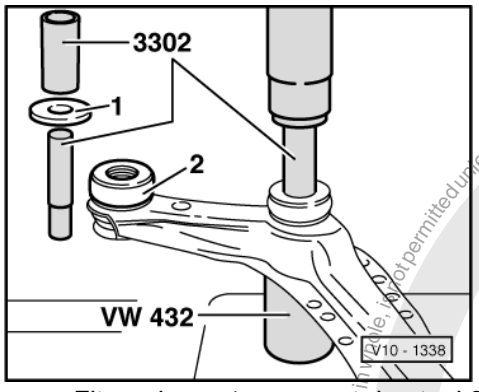

- -> Fit washers -1- over peening tool 3302 onto the rubber mounting -2-.
- Fit press sleeve of peening tool 3302 and using a press, press the washers onto the spacer sleeves and peen. Use VW 432 as packing.
- Remove any resulting protrusion/burr on the peening.

1.7 - Additional information and removal instructions for vehicles with air conditioner

Warning!
The air conditioning system refrigerant circuit must not be opened.

Note:

The opening of the refrigerant circuit can only be carried out in workshops, which have trained personnel and the necessary range of tools and workshop equipment.

To facilitate removing and installing the engine without opening the refrigerant circuit:

- Unbolt air conditioner fluid reservoir and allow to hang free.
- Unbolt retaining clamp(s) for refrigerant lines.
- Remove ribbed belt => Page 26 .
- Removing lock carrier with attachments:

Protected by copyright. Copying for private or commercial purposes, in any form, not permitted unless authorised by Volkswagen AG. Volkswagen AG does not guarantee or accept any liability with respect to the correctness of information in this document. Copyright by Volkswagen AG.
satelettronica

=> General body repairs; Repair group 50; Body, front; Removing and installing lock carrier with attachments.
Body, front Removing and installing lock carrier with attachments.

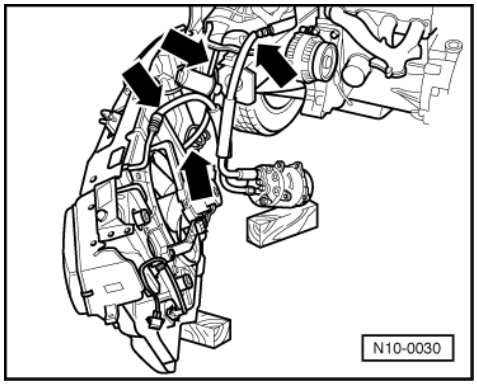

- Removing air conditioner compressor:

=> Heating, Air conditioning; Repair group 87; removing and installing compressor bracket removing and installing compressor bracket

- -> Remove air conditioner compressor and lay to one side with lock carrier so that the refrigerant hoses - arrows- are not stressed.

Protected by copyright. Copying for private or commercial purposes, in part or in whole, is not permitted unless authorised by Volkswagen AG. Volkswagen AG does not guarantee or accept any liability with respect to the correctness of information in this document. Copyright by Volkswagen AG.
satelettronica

13 - Crankshaft group

1 - Dismantling and assembling engine

1.1 - Dismantling and assembling engine

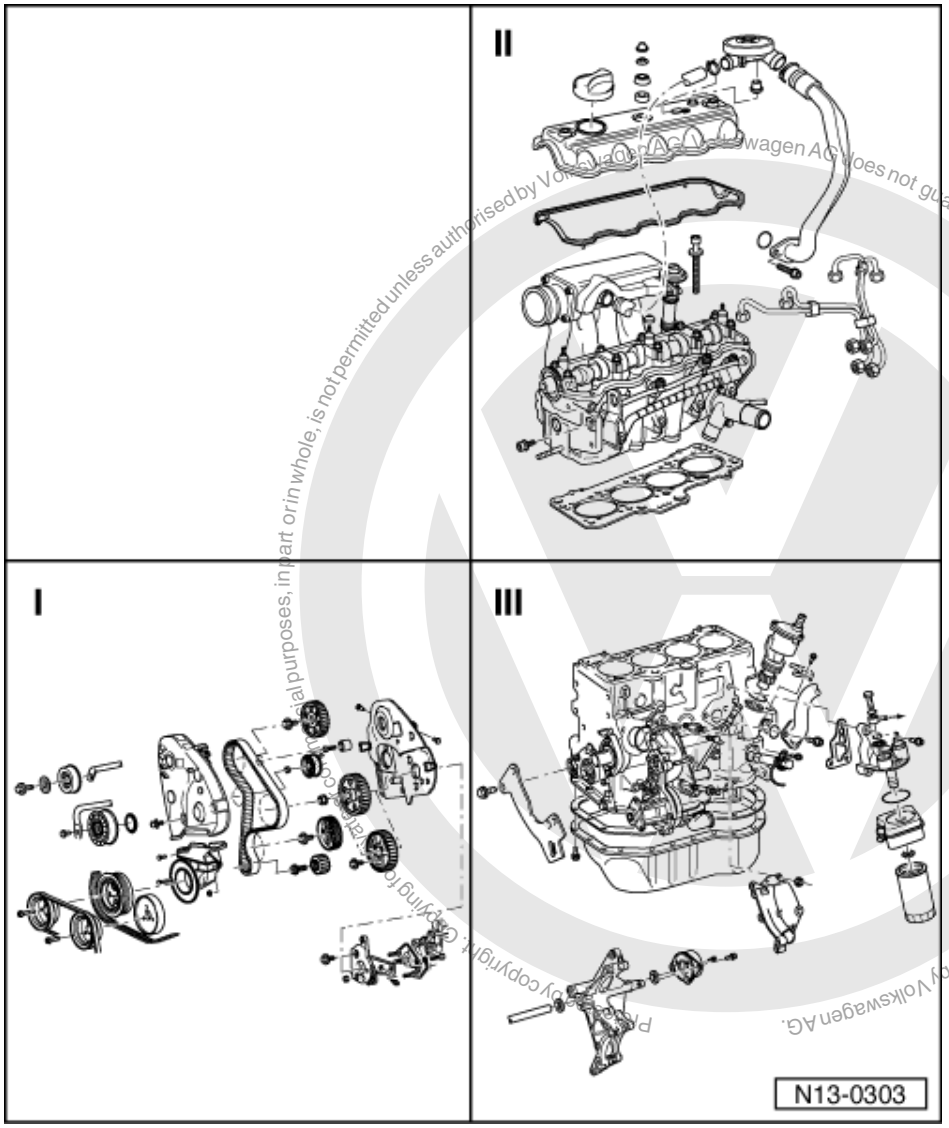

Notes:

- If during repair work, metal shavings or larger quantities of small metal particles are found in the engine oil - caused, for example, by partial seizure of the crankshaft and conrod bearings - then, apart from thoroughly cleaning out the oil passages, it is necessary to renew the oil cooler.
- Defective injectors can cause violent knocking noises in the engine which sound like defective bearings. When this occurs, run engine at idling speed and slacken off injector pipe unions one after the other. If knocking stops when a union is loosened, this indicates that the injector concerned is defective.

satelettronica

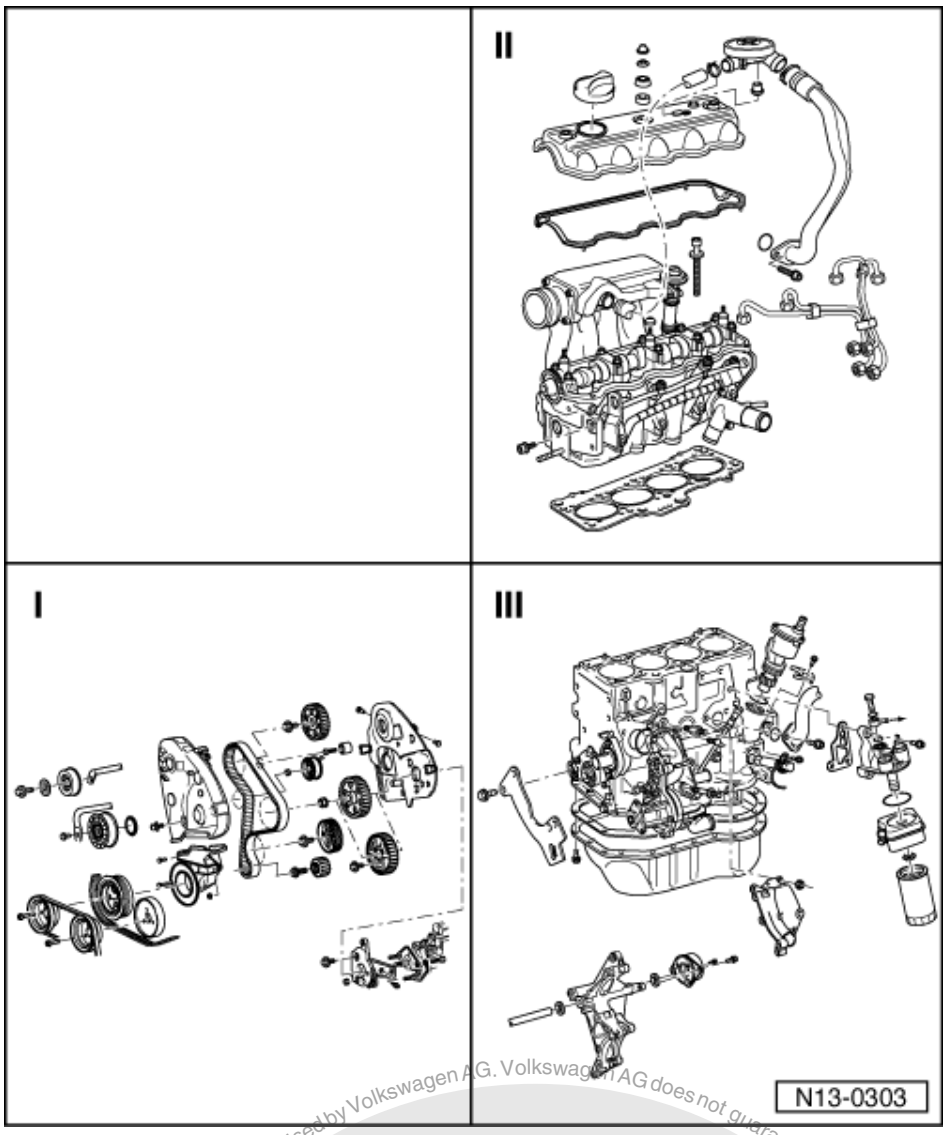

Servicing injectors.

Engine codes AEY, AFN, AHB, AHU, AKW, ALE

=> Repair group 23; Servicing diesel direct injection system; Servicing injectors Servicing diesel direct injection system Servicing injectors

Engine code 1Y

=> Repair group 23; Servicing fuel injection system; Servicing injectors Servicing fuel injection system Servicing injectors

I =>Page 13

II =>Page 19

III =>Page 22

Protected by copyright. Copying for private or commercial purposes, in part or in whole, is not permitted unless authorised by Volkswagen AG. Volkswagen AG does not guarantee or accept any liability with respect to the correctness of information in this document. Copyright by Volkswagen AG.
satelettronica

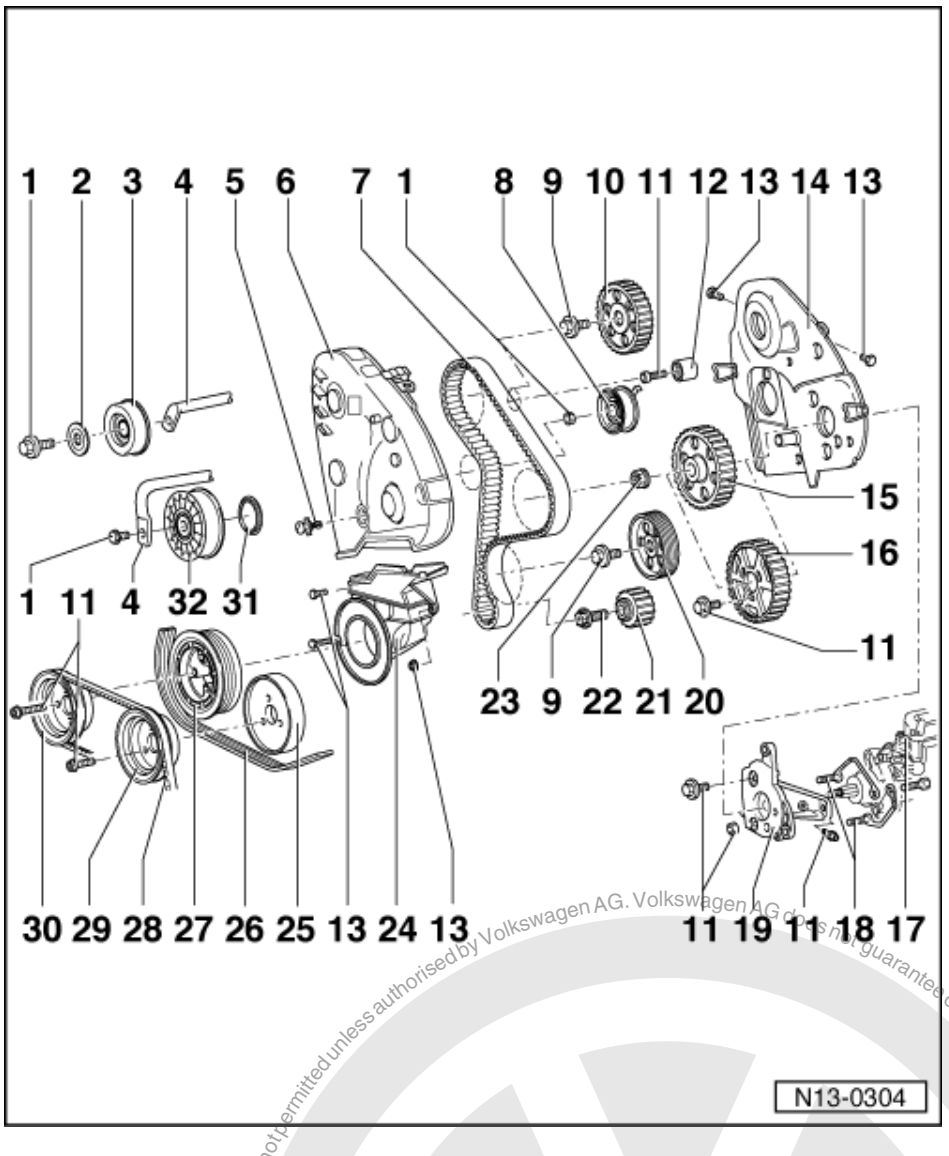

Part I

1 20 Nm
2 Washer
3 Tensioner
4 Tensioning lever
- Grease with G 000 100

5 Spreader clip
6 Toothed belt guard - upper part
7 Toothed belt
- Mark D.O.R. before removing
- Check for wear
- Do not kink
- Removing, installing and tensioning => Page 29

Protected by copyright. Copyright by Volkswagen AG. Copying for private or commercial purposes, in part or in whole, is not permitted unless authorised by Volkswagen AG. Volkswagen AG does not guarantee or accept any liability with respect to the correctness of information in this document.
satelettronica

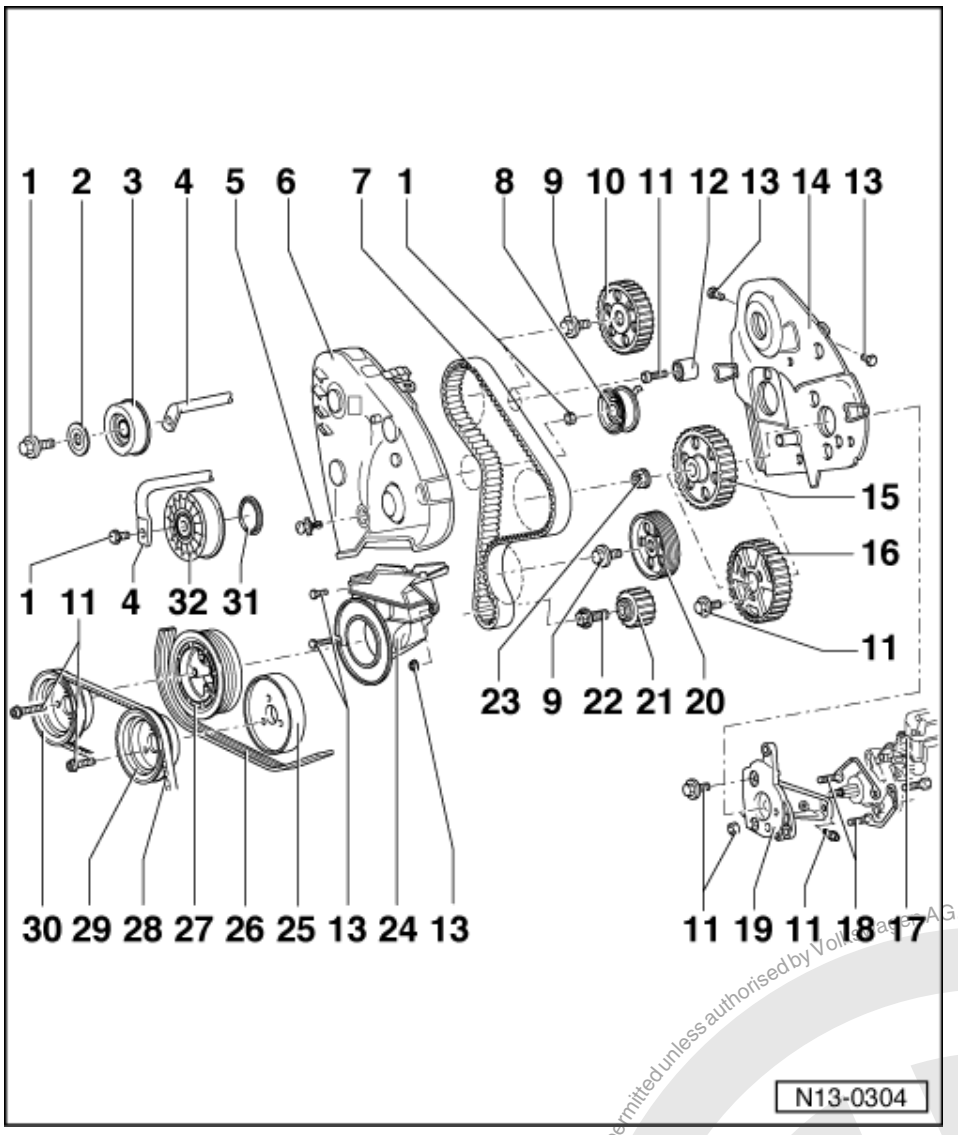

8 Tensioning roller
- Checking => Page 35
- Tensioning toothed belts => Page 29

9 45 Nm

10 Camshaft sprocket
- Drive off camshaft taper using hammer and drift through toothed belt guard openings

11 25 Nm

12 Idler wheel
- Only engine codes AEY, AFN, AHB, AHU, AKW, ALE

13 10 Nm

14 Rear toothed belt guard

Protected by copyright. Copying for private or commercial purposes, in part or in whole, is not permitted unless authorised by Volkswagen AG. Volkswagen AG does not guarantee or accept any liability with respect to the correctness of information in this document. Copyright by Volkswagen AG.
satelettronica

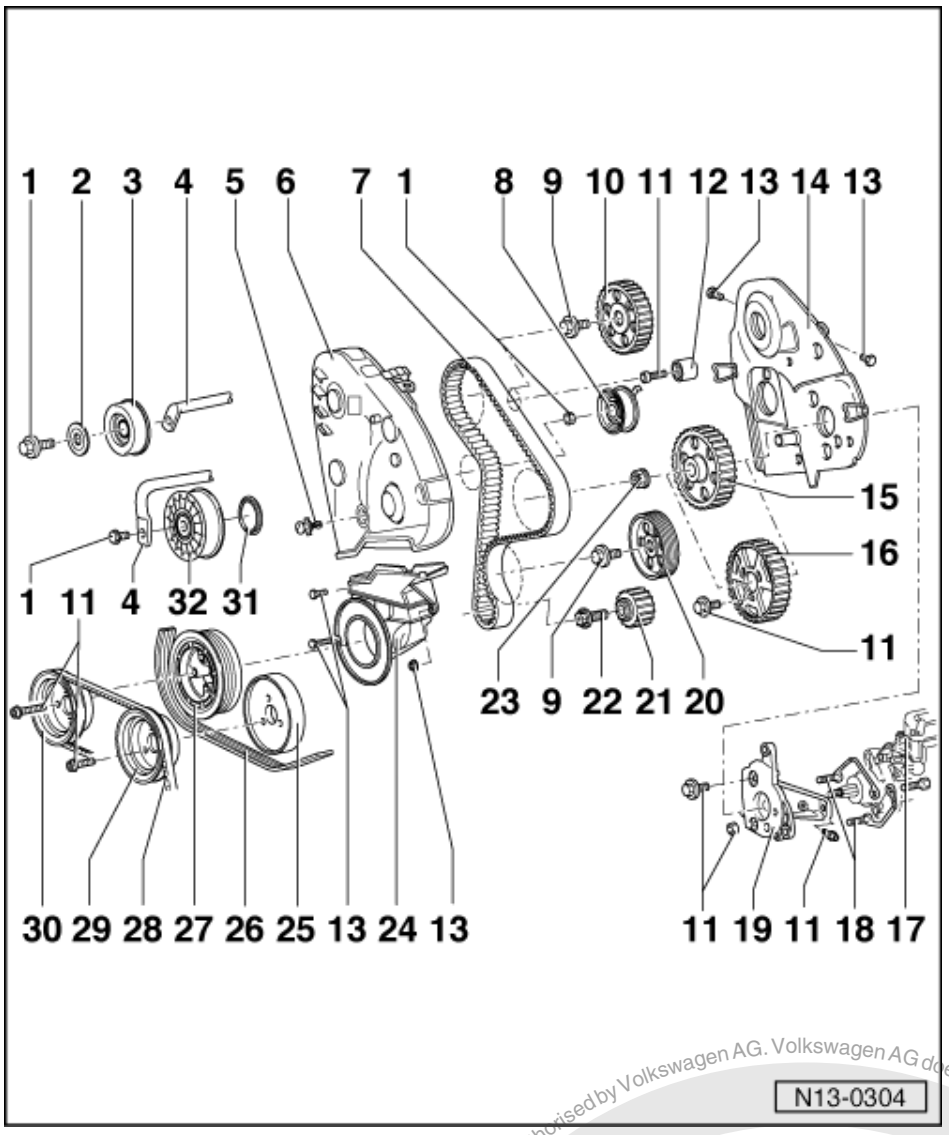

15 Injection pump sprocket

- Single part
- Only engine codes AEY, AFN, AHB, AHU, AKW, ALE
- Removing =>Page 36

16 Injection pump sprocket

- Two part
- Engine code1Y

17 Injection pump

- Removing and installing for engine codes AEY, AFN, AHB, AHU, AKW, ALE

=> Repair group 23; Servicing diesel direct injection system; Removing and installing injection pump Servicing diesel direct injection system Removing and installing injection pump

- Removing and installing for engine code 1Y

=> Repair group 23; Servicing fuel injection system; Removing and installing injection pump Servicing fuel injection system Removing and installing injection pump

18 Bracket

- Only engine codes AEY, AFN, AHB, AHU, AKW, ALE

Protected by copyright. Copying for private or commercial purposes, in part or in whole, is not permitted unless authorised by Volkswagen AG. Volkswagen AG does not guarantee or accept any liability with respect to the correctness of information in this document. Copyright by Volkswagen AG.
satelettronica

Protected copyright. Private or commercial purposes, in part or in whole, is not permitted unless authorised by Volkswagen AG. Volkswagen AG does not guarantee or accept any liability with respect to the correctness of information in this document. Copyright by Volkswagen AG.

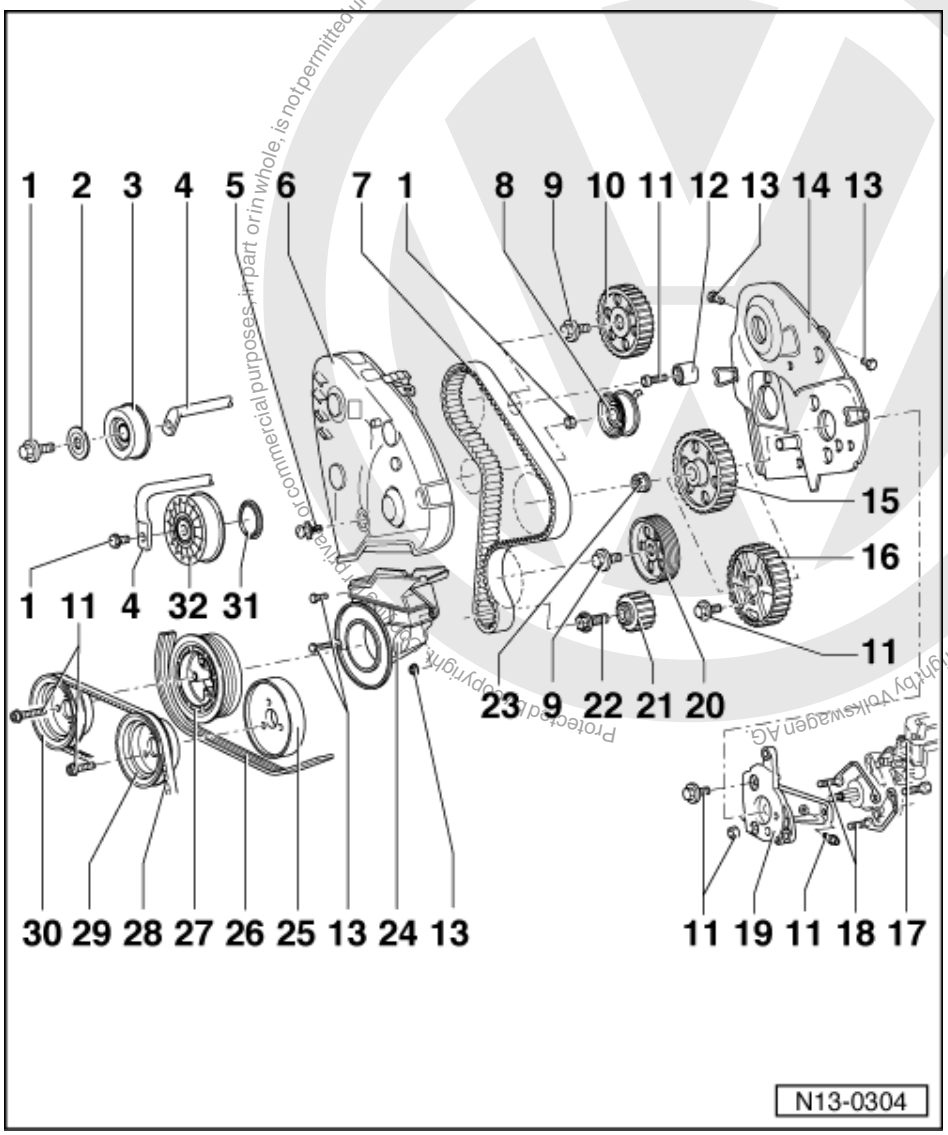

19 Console

20 Intermediate shaft sprocket

21 Crankshaft toothed belt sprocket

22 90 Nm + 1/4 turn (90 °) further

- Counter-hold with 3099 to loosen and tighten
- Renew
- Threads and shoulder must be free of oil and grease
- The quarter turn further can be done in several stages.

23 55 Nm

- 45 Nm for engine code 1Y

24 Toothed belt guard - lower part

satelettronica

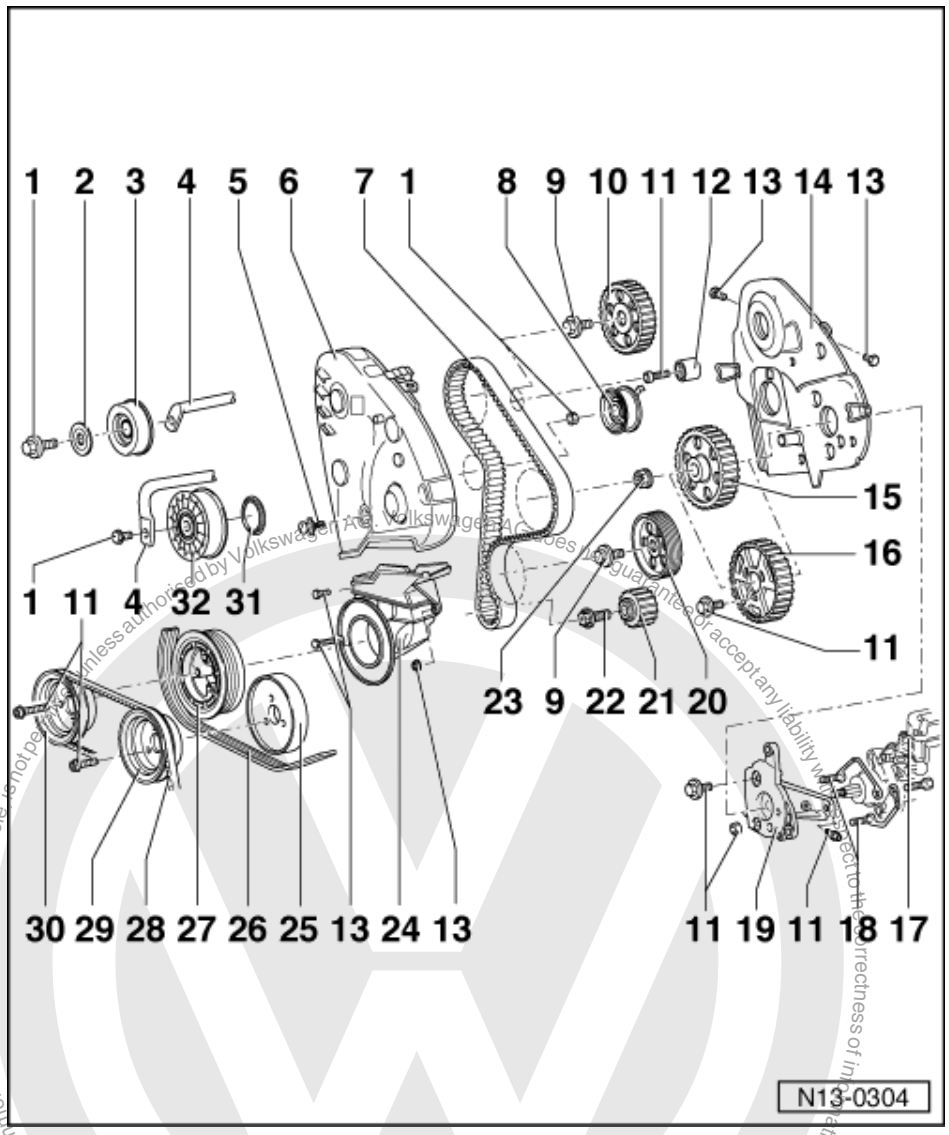

25 Pulley
- For coolant pump
- Version for ribbed belt

26 Ribbed belt
- Mark direction of rotation before removing
- Removing and installing
  => Page 26

27 Belt pulley/vibration damper
- Can only be installed in one position. Holes are off-set

28 V-belt
- Adjusting V-belt tension:

=> Running gear; Repair group 48; Assembly overview: vane pump, reservoir, hydraulic pipes Assembly overview: vane pump, reservoir, hydraulic pipes

satelettronica

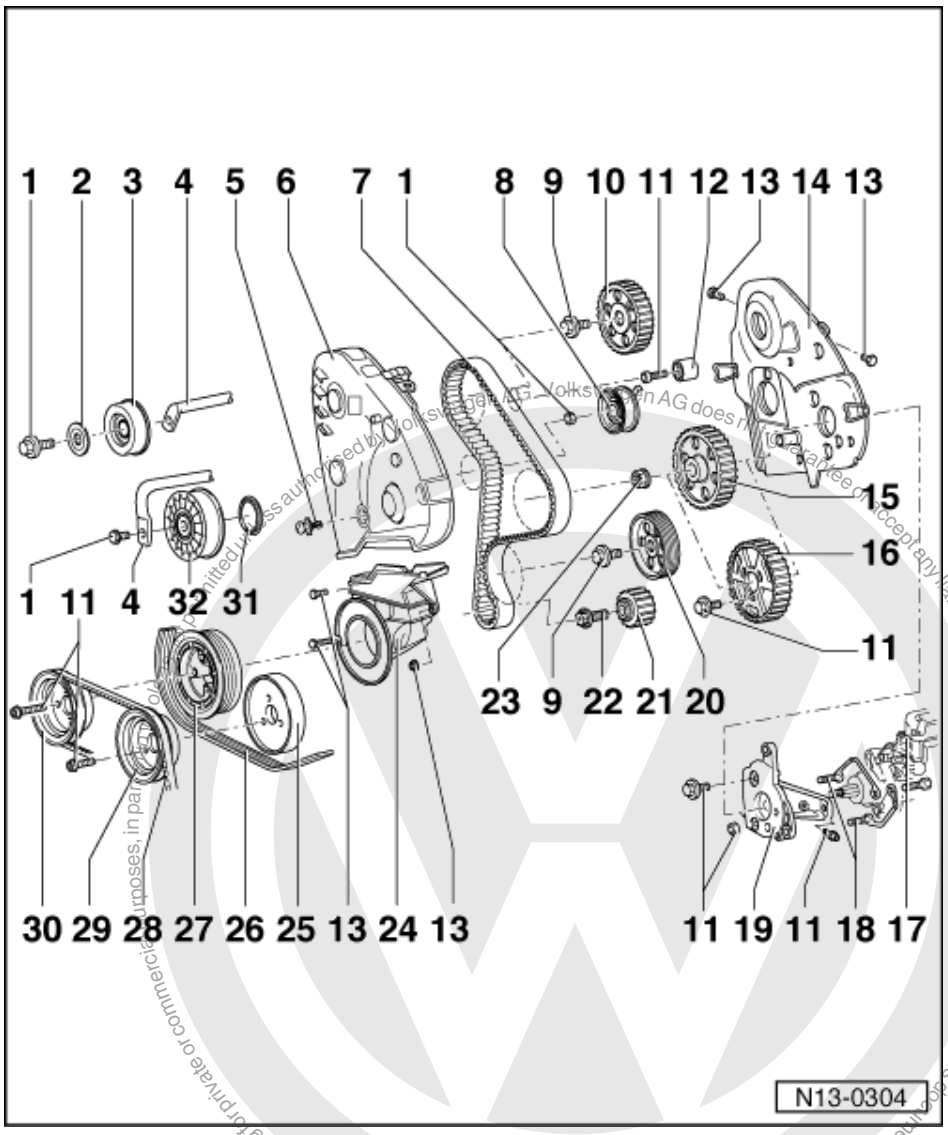

29 Pulley
- For coolant pump
- V-belt version

30 Belt pulley
31 Dust cap
32 Tensioner

Protected by copyright. Copying for private or commercial purposes, in part or in whole, is not permitted unless authorised by Volkswagen AG. Copyright by Volkswagen AG. Volkswagen AG does not guarantee or accept any liability with respect to the correctness of information in this document.
satelettronica

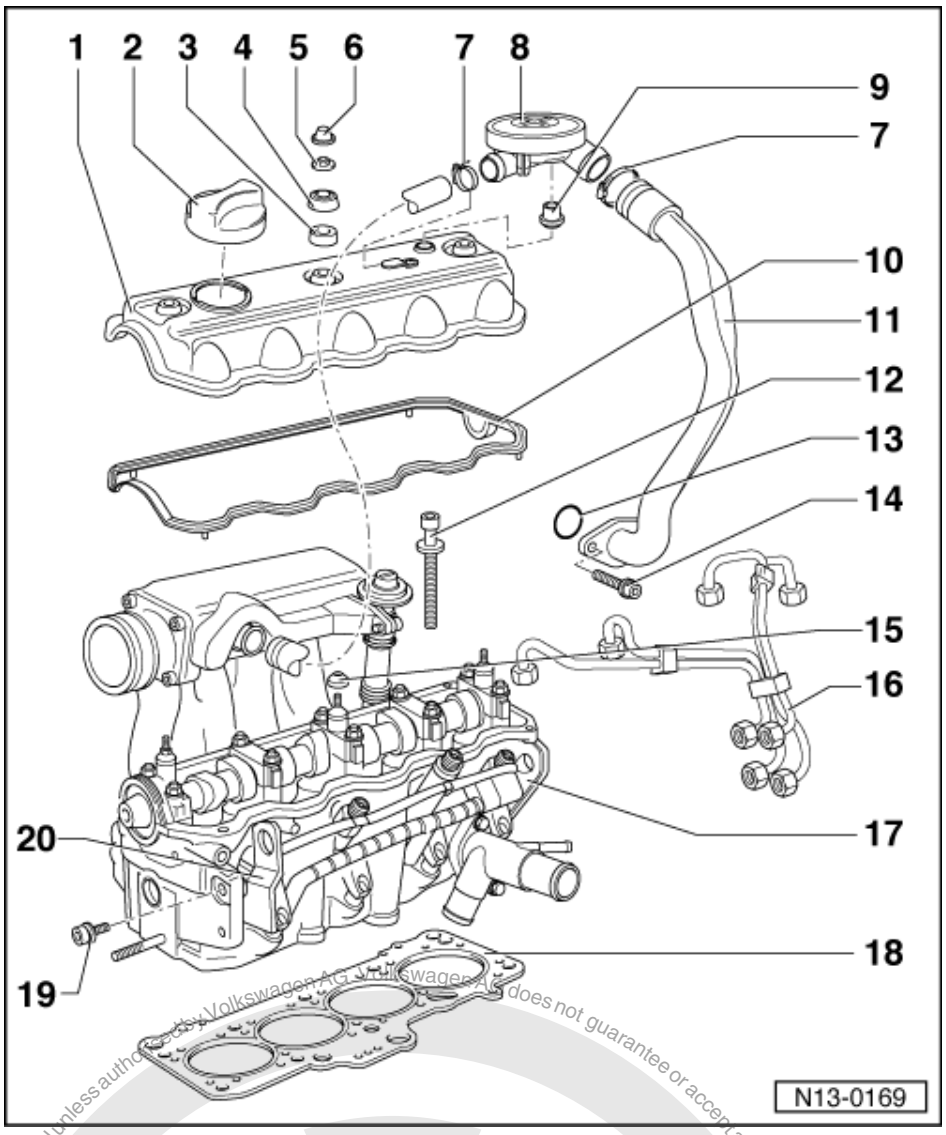

Part II

1 Cylinder head cover
2 Cap
- Renew seal if damaged

3 Upper sealing washer
4 Dished washer
5 10 Nm
6 Cap
7 Retaining clip
8 Pressure regulating valve
- For crankcase breather

Protected by copyright. Copying for private or commercial purposes, in part or in whole, is not permitted unless authorised by Volkswagen AG. Volkswagen AG does not guarantee or accept any liability with respect to the correctness of information in this document. Copyright by Volkswagen AG.
satelettronica

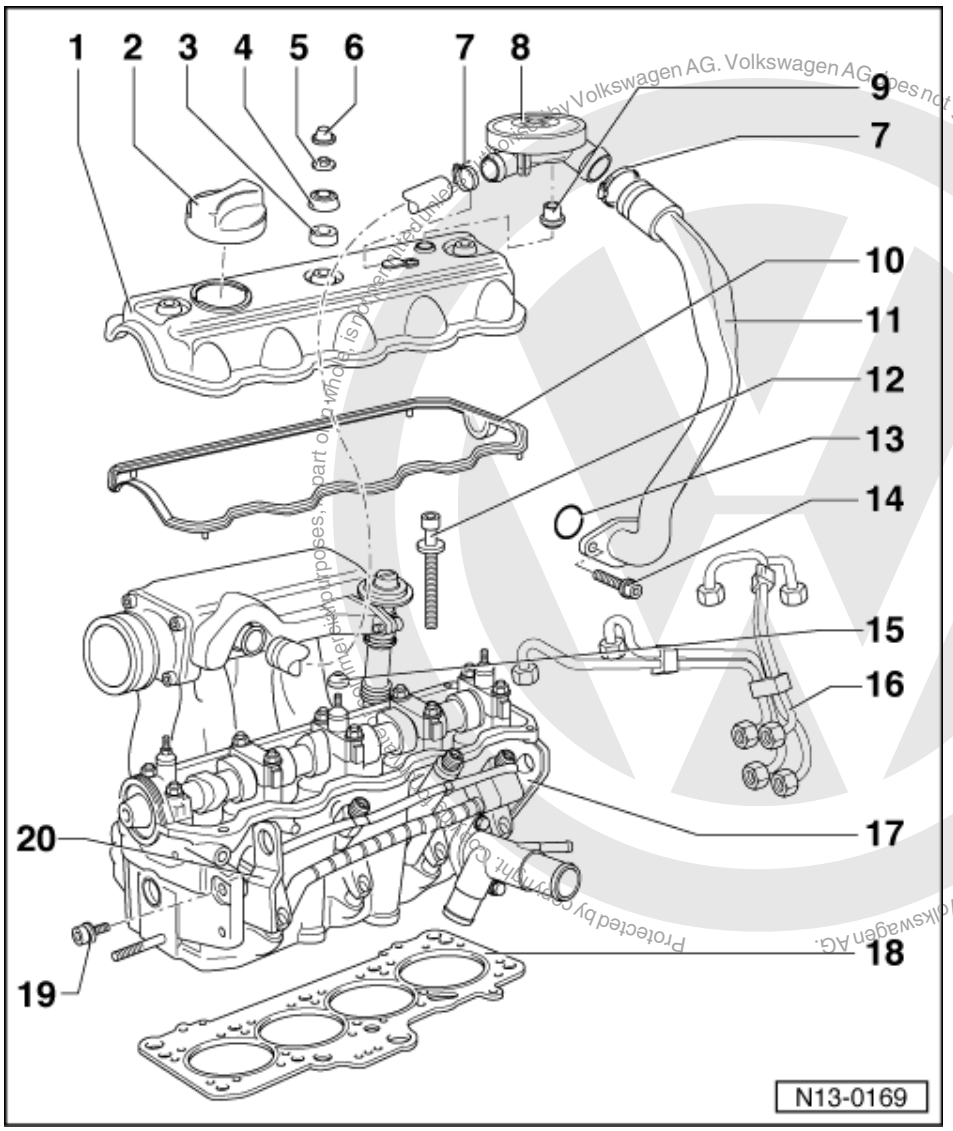

Protected by copyright. Copyright by Volkswagen AG. Volkswagen AG does not guarantee or accept any liability with respect to the correctness of information in this document.

satelettronica

9 Gasket
- Renew if damaged

10 Cylinder head cover gasket
- Renew if damaged
- Insert projections into holes on cylinder head
- Before fitting gasket coat transition between bearing cap/cylinder head with "D2"

11 Crankcase breather

12 Cylinder head bolt
- Renew
- Note sequence when loosening and tightening
  => Page 60 , removing and installing cylinder head

13 O-ring
- Renew

14 25 Nm

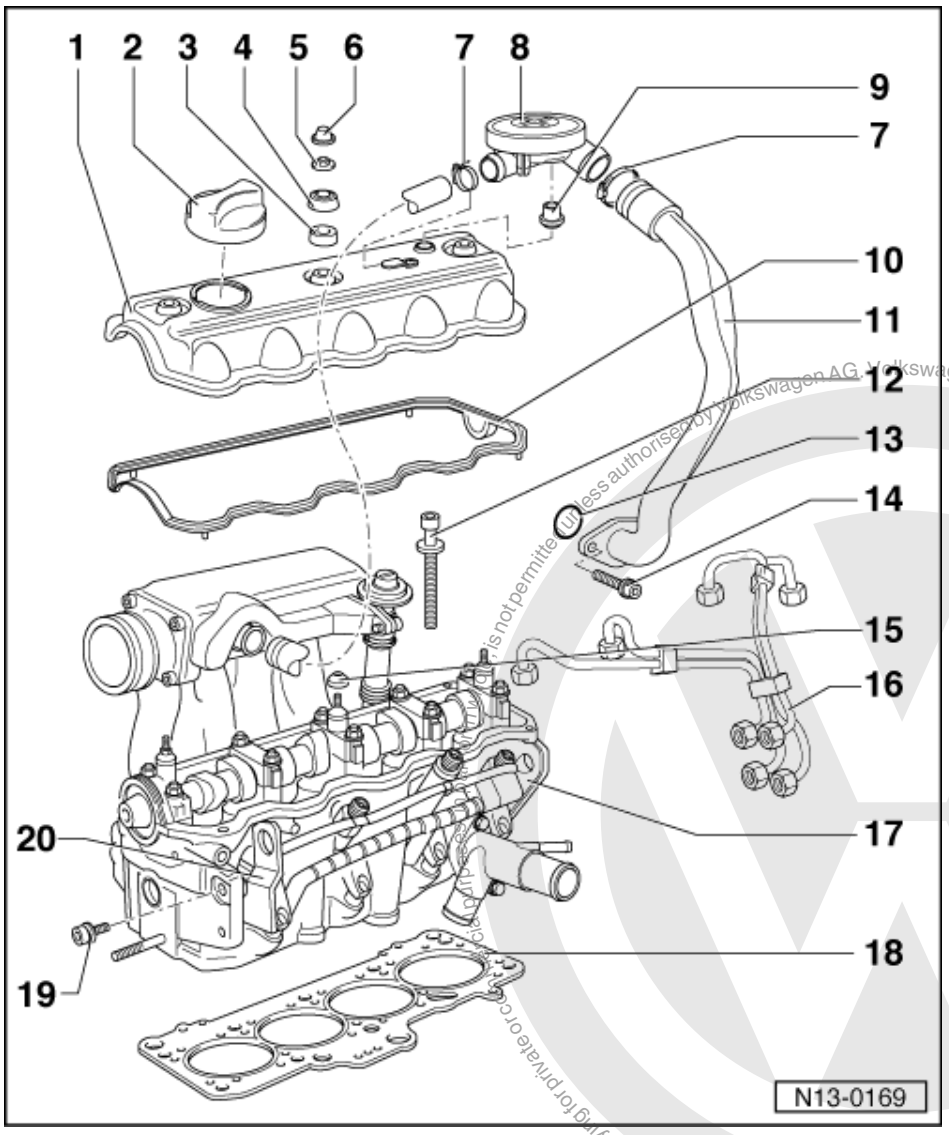

15 Lower sealing cone

16 Injector pipes

- Tighten to 25 Nm
- Remove with ring spanner 3035
- Always remove pipework complete
- Do not alter shape

17 Cylinder head

- Removing and installing => Page 55
- If replaced renew the complete coolant

18 Cylinder head gasket

- Renew
- Note marking =>Page 54
- If replaced renew the complete coolant

19 20 Nm

20 Lifting eye

Protected by copyright. Copying for private or commercial purposes, in part or in whole, is not permitted unless authorised by Volkswagen AG. Volkswagen AG does not guarantee or accept any liability with respect to the correctness of information in this document. Copyright by Volkswagen AG.
satelettronica

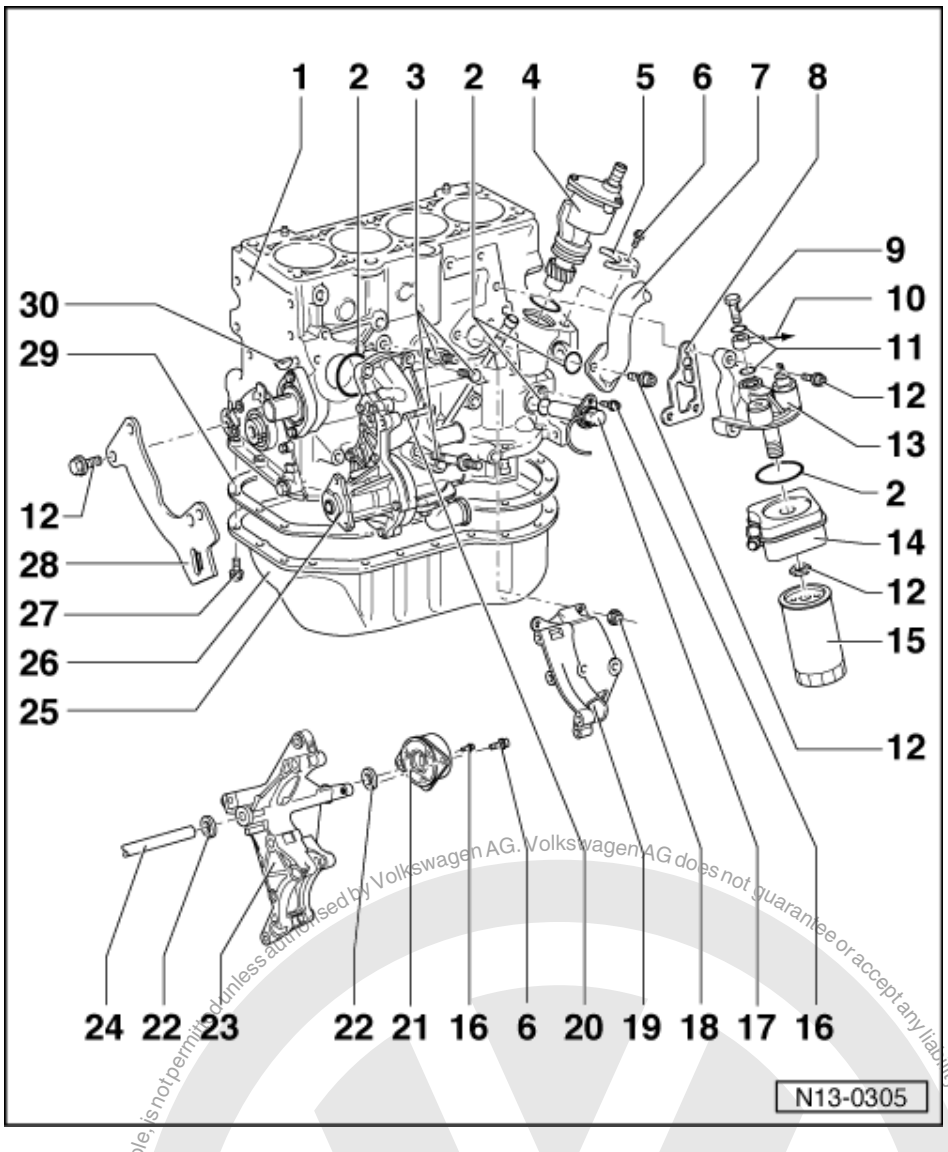

Part III

1 Cylinder block
- Removing and installing sealing flange and pressure plate/flywheel/drive plate => Page 37
- Removing and installing crankshaft => Page 42
- Dismantling and assembling pistons and conrods => Page 46

2 O-ring
- Renew if damaged

3 Turn 20 Nm + 1/4 turn (90 °) further
- Renew

4 Vacuum pump

5 Clamp

Protected by copyright. Copying for private or commercial purposes, in part or in whole, is not permitted unless authorised by Volkswagen AG. Volkswagen AG does not guarantee or accept any liability with respect to the correctness of information in this document. Copyright by Volkswagen AG.
satelettronica

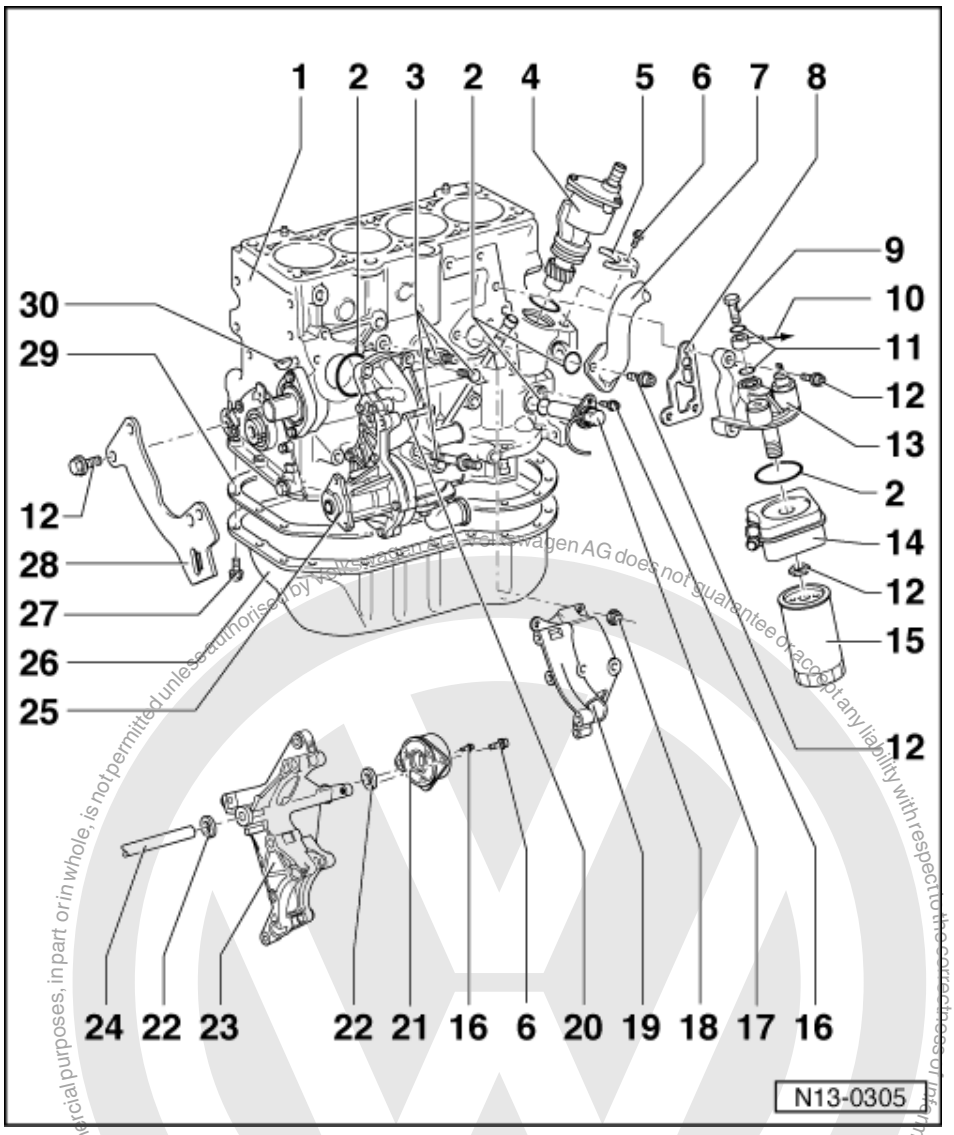

6 20 Nm
7 Connecting piece
- For crankcase breather

8 Gasket
- Renew

9 Banjo bolt, 25 Nm
10 To turbo charger
- Only engine codes AFN, AHU, ALE

11 Sealing ring
- Renew

12 25 Nm
13 Oil filter bracket
14 Oil cooler
- Coat contact area to flange, outside the seal, with AMV 188 100 02
- Ensure clearance to adjacent components
- See note
  => Page 11

Protected by copyright. Copying for private or commercial purposes, in part or in whole, is not permitted unless authorised by Volkswagen AG. Volkswagen AG does not guarantee or accept any liability with respect to the correctness of information in this document. Copyright by Volkswagen AG.
satelettronica

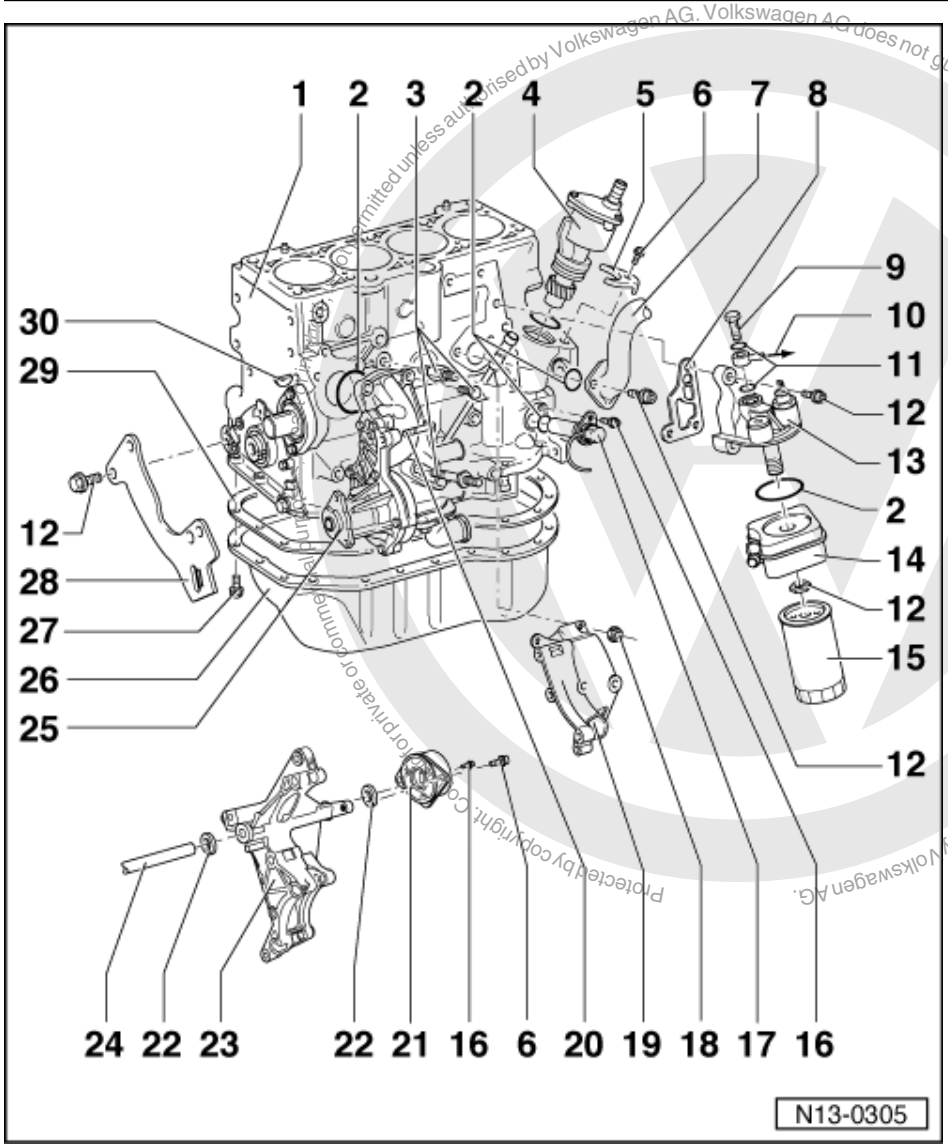

15 Oil filter
- Loosen with strap wrench
- Tighten by hand
- Note instructions on filter when installing

16 10 Nm

17 Engine speed sender
- Only engine codes AEY, AFN, AHB, AHU, AKW, ALE

18 30 Nm

19 Bracket
- For ribbed belts without tensioner

20 Hammer head bolt

21 Tensioning element

22 Sealing ring
- Renew if damaged

Copyright by Volkswagen AG. Volkswagen AG does not guarantee or accept any liability with respect to the correctness of information in this document. Copyright by Volkswagen AG. Protected by copyright. Copying for private or commercial purposes, in part or in whole, is not permitted unless authorised by Volkswagen AG.
satelettronica

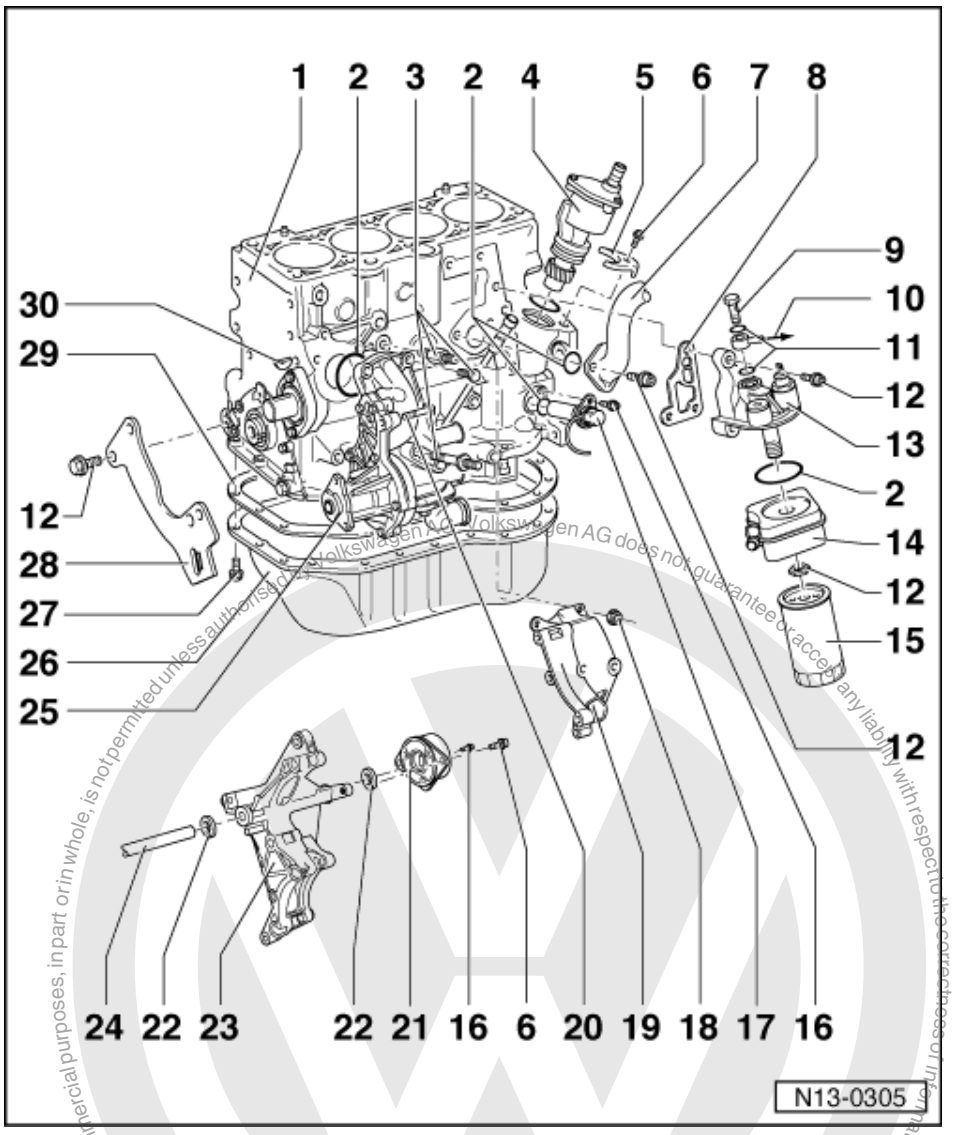

23 Bracket
- For ribbed belts with tensioner

24 Tensioning lever
- Grease with G 000 100

25 Coolant pump
- Dismantling and assembling => Page 100

26 Sump
- Clean sealing surface before installing
- Engine codes AEY, AHB for oil sump cover
- Removing and installing oil sump cover =>Page 90

27 20 Nm
- Remove and install both rear bolts gearbox end with jointed spanner 3185

satelettronica

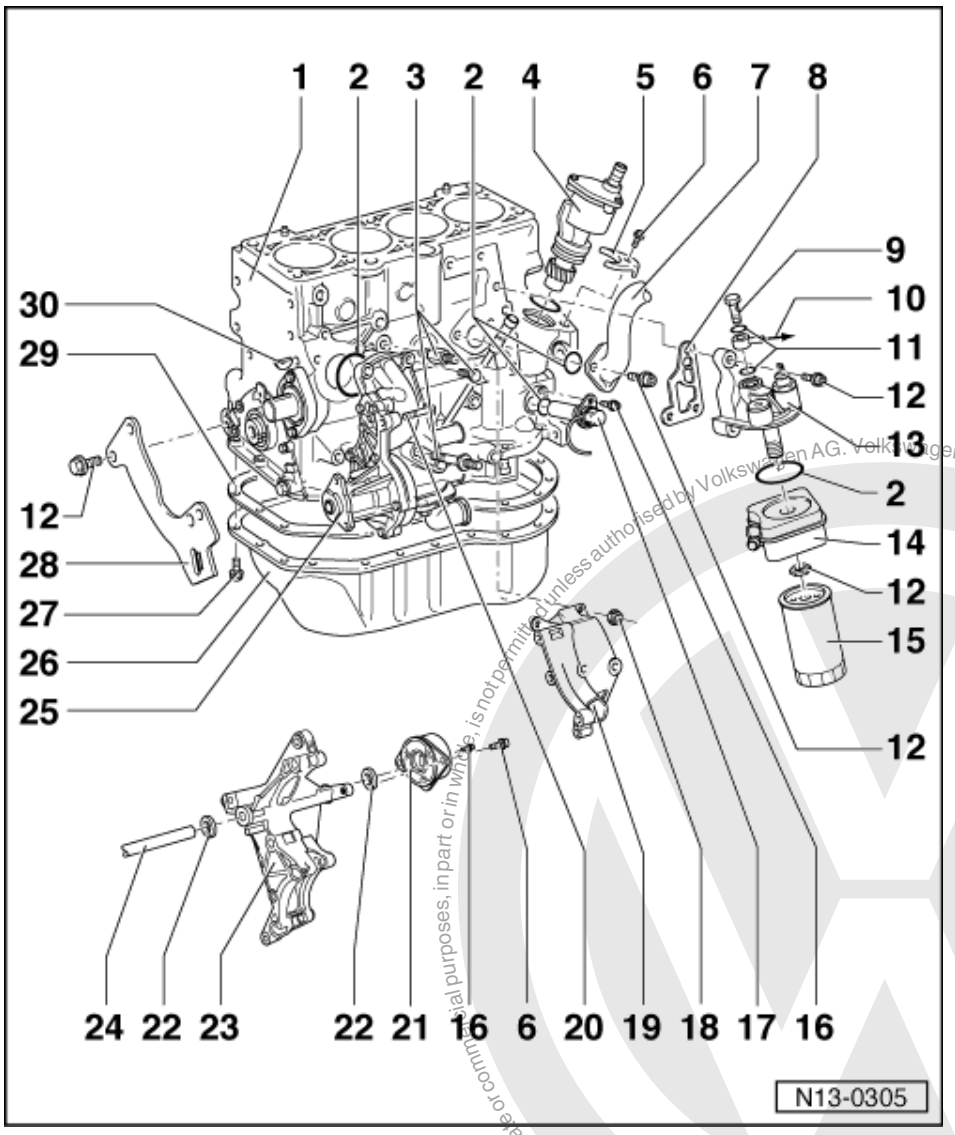

28 Bracket
- For vane pump

29 Gasket
- Renew
- Engine code 1Y with baffle plate: Replace gasket if damaged
- Before fitting gasket coat sump flange/cylinder block flange with "D2"

30 Woodruff key
- Check for tight fit

1.2 - Removing and installing ribbed belt

Note:

Before removing the ribbed belt mark the direction of rotation. When installing the belt ensure it is correctly seated in the pulley.

Belt drive without tensioner

(Belt drive with tensioner =>Page 28)

Protected by copyright. Copyright by Volkswagen AG. Copying for private or commercial purposes, in part or in whole, is not permitted unless authorised by Volkswagen AG. Volkswagen AG does not guarantee or accept any liability with respect to the correctness of information in this document.
satelettronica

Copyright by Volkswagen AG. Volkswagen AG does not guarantee or accept any liability with respect to the correctness of information in this document. Copyright by Volkswagen AG. Any use of this document or parts thereof outside of the scope of the copyright law without permission is not permitted unless authorised by Volkswagen AG.

Special tools, workshop equipment, testers, measuring instruments and auxiliary items required

- Lever 3297
- Torque wrench V.A.G 1331 (5 - 50 Nm)

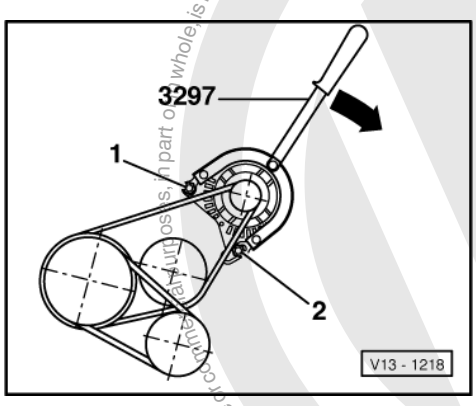

Removing ribbed belt

- -> Loosen alternator securing bolts -1- and -2- at least one turn.
- Press alternator down with lever 3297 and remove ribbed belts from the alternator pulley.
- Remove power assisted steering vane pump V-belt:

=> Running gear; Repair group 48; Assembly overview: vane pump, reservoir, hydraulic pipes Assembly overview: vane pump, reservoir, hydraulic pipes

- Remove ribbed belt.

Installing ribbed belt

- Place ribbed belt on crankshaft pulley/vibration damper and coolant pump pulley.
- Fit power assisted steering vane pump V-belt:

=> Running gear; Repair group 48; Assembly overview: vane pump, reservoir, hydraulic pipes Assembly overview: vane pump, reservoir, hydraulic pipes

- Push generator down onto stop at least 3 times with lever 3297, to ensure it moves freely.

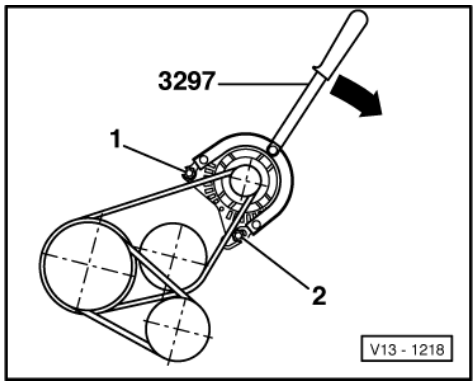

- -> Push alternator down using tensioning lever 3297 and fit ribbed belt.

Note:

If the engine has not yet been fitted, carry on with sequence after the engine has been installed.

- Run engine for at least 10 seconds at idling with the alternator still loose.

satelettronica

Note:

When tightening the alternator bolts observe tightening sequence, do not use alternator for support and do not touch ribbed belt.

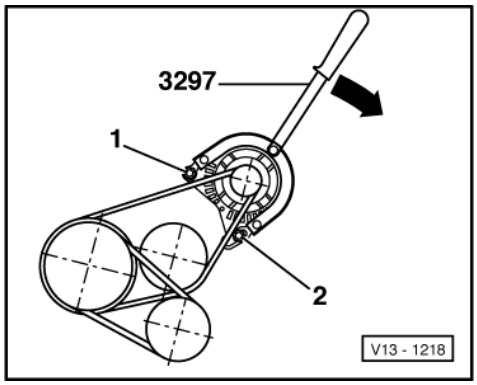

- -> Tighten securing bolt -2- to 25 Nm.
- Tighten securing bolt -1- to 25 Nm.

Belt drive with tensioner

Removing ribbed belt

- Remove ribbed belt cover.

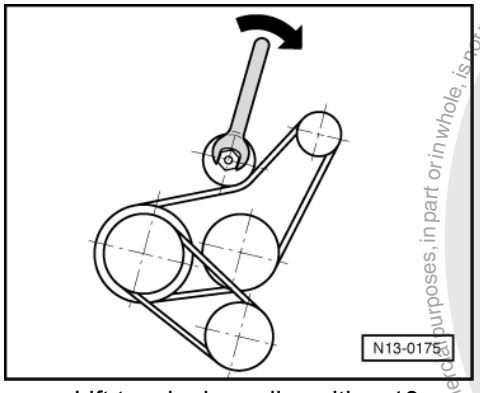

- -> Lift tensioning roller with a 13 mm spanner and remove ribbed belt from the alternator pulley.
- Remove power assisted steering vane pump V-belt:

=> Running gear; Repair group 48; Assembly overview: vane pump, reservoir, hydraulic pipes Assembly overview: vane pump, reservoir, hydraulic pipes

- Remove ribbed belt.

Installing ribbed belt

- Place ribbed belt on crankshaft pulley/vibration damper.
- Fit power assisted steering vane pump V-belt:

=> Running gear; Repair group 48; Assembly overview: vane pump, reservoir, hydraulic pipes Assembly overview: vane pump, reservoir, hydraulic pipes

Protected by copyright. Copying for private or commercial purposes, in part or in whole, is not permitted unless authorised by Volkswagen AG. Volkswagen AG does not guarantee or accept any liability with respect to the correctness of information in this document. Copyright by Volkswagen AG.
satelettronica

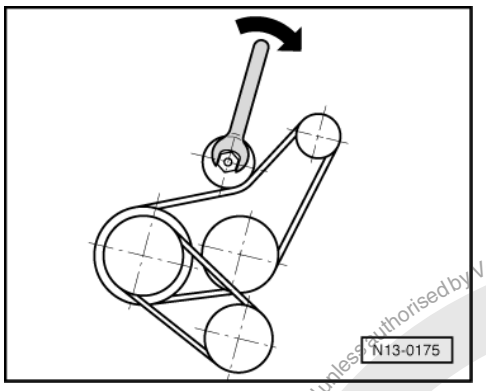

- Lift tensioning roller with a 13 mm spanner and fit ribbed belt.

-> Belt drive without air conditioner compressor

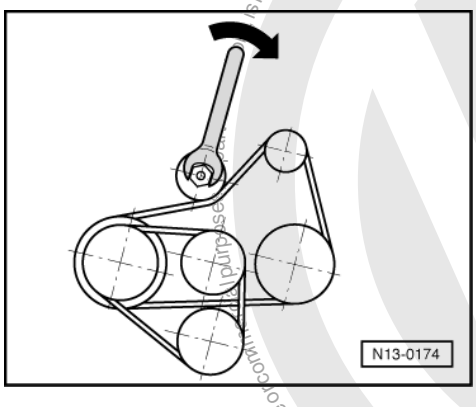

-> Belt drive with air conditioner compressor

1.3 - Removing and installing toothed belt

Special tools, workshop equipment, testers, measuring instruments and auxiliary items required

- Lever 3297 (for ribbed belt drive without tensioning roller).
- Drift 2064 (for single part injection pump sprocket)
- Pin 3359 (for two part injection pump sprocket)
- Setting bar 2065 A
- Water pump wrench V.A.G 1590
- Pin wrench Matra V159
- V.A.G 1331 Torque wrench (5...50 Nm)

With engine removed:

- TDC setting device 2068 A

Belt drive with single part injection pump sprocket

Belt drive with two part injection pump sprocket =>Page 33

Removing

- Remove ribbed belt => Page 26 .

Protected by copyright. Copying for private or commercial purposes, in part or in whole, is not permitted unless authorised by Volkswagen AG. Volkswagen AG does not guarantee or accept any liability with respect to the correctness of information in this document. Copyright by Volkswagen AG.
satelettronica

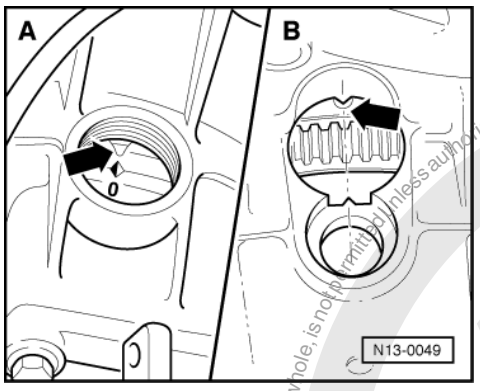

- If fitted remove ribbed belt tensioning roller.
- Remove upper toothed belt guard and cylinder head cover.
- -> Turn crankshaft to TDC No. 1 cylinder.
  A: Engine codes AEY, AHB, AKW
  B: Engine codes AFN, AHU, ALE

Engine removed:

Engine codes AEY, AHB, AKW

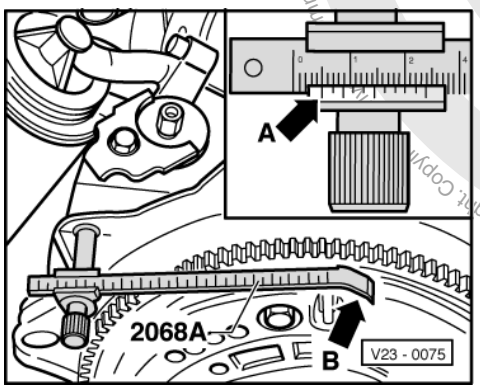

- -> Install adjustment device 2068 A as shown.
- Set adjustment device to 5 mm -arrow A-. The left-hand notch of the scale is the reference point.
- Turn crankshaft until flywheel TDC marking aligns with point of setting device -arrow B-.

Engine codes AFN, AHU, ALE

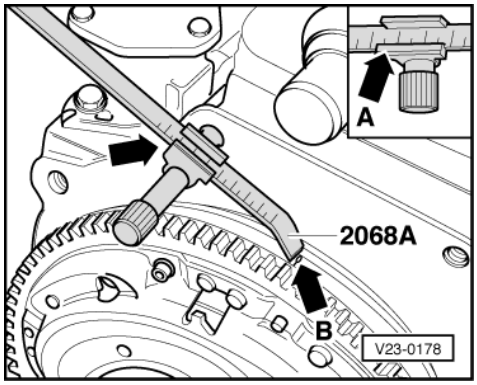

- -> Install adjustment device 2068 A as shown.
- Set adjusting tool to 96.0 mm. The reference point is the graduation mark on the left of the vernier scale -arrow A-.
- Turn crankshaft until TDC mark on the flywheel is aligned with the tip of the adjusting tool -arrow B-.

Protected by copyright. Copyright by Volkswagen AG.
Copyright by Volkswagen AG. Volkswagen AG does not guarantee or accept any liability with respect to the correctness of information in this document.
satelettronica

Continued for all engine codes

Copyright by Volkswagen AG. Volkswagen AG does not guarantee or accept any liability with respect to the correctness of information in this document. Copyright by Volkswagen AG. Copy or transmit to third parties or use for competitive purposes, in part or in whole, is not permitted unless authorised by Volkswagen AG.

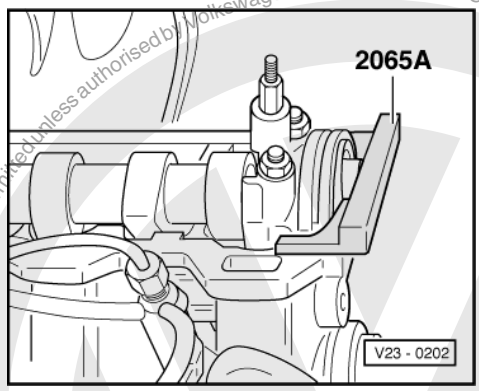

- -> Lock camshaft with setting bar.
- Centralize setting bar as follows:
  Turn camshaft so that one end of setting bar contacts the cylinder head. Using feeler gauge establish the gap at the other end of the setting bar. Place a feeler gauge corresponding to half the gap between setting bar and cylinder head. Turn camshaft until the setting bar contacts the feeler gauge. Place a 2nd feeler gauge, of same thickness, at the other end between setting bar and cylinder head.

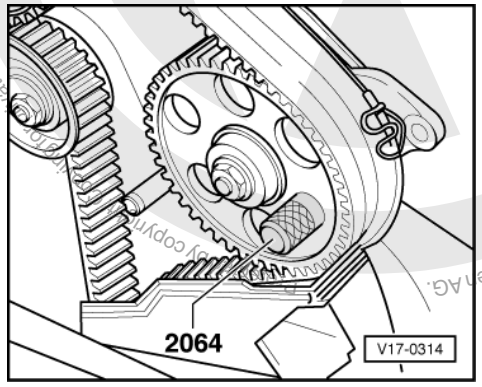

- -> Lock injection pump sprocket with pin.
- Loosen tensioner.
- Remove coolant pump pulley (use V.A.G 1590 to loosen and tighten the securing bolt).
- Remove vibration damper and belt pulley.
- Remove lower toothed belt guard.
- Mark D.O.R. of toothed belt.
- Remove idler wheel.
- Take off toothed belt.

Installing

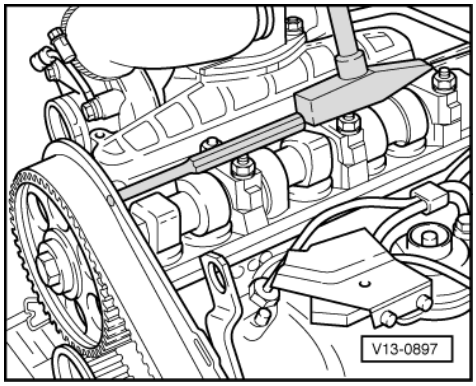

- Check whether TDC mark on flywheel and reference mark are aligned.

satelettronica

Note:

Never use setting bar as a counter hold when loosening and tightening the camshaft sprocket, use retainer 3036.

- -> Loosen camshaft sprocket securing bolt 1/2 turn. Release camshaft sprocket from camshaft taper by tapping with a hammer (using a drift through rear toothed belt guard opening).

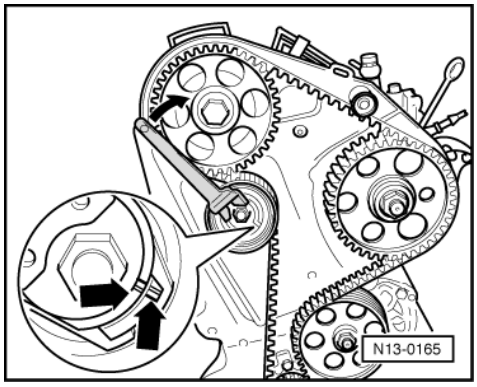

- Fit toothed belt (note direction of rotation) and remove pin from injection pump sprocket.
- Install idler roller.
  Tightening torque: 25 Nm
- -> Tension toothed belt. Using pin wrench (e.g. Matra V159) on eccentric turn clockwise until the notch and the raised mark -arrows- align.

Note:

If the eccentric has been turned too far the tensioning roller must be relieved completely and retensioned. The eccentric must never be turned back when it has been turned too far.

- Tighten lock nut on tensioning roller.
  Tightening torque: 20 Nm
- Check again whether TDC mark on flywheel and reference mark are aligned.
- Tighten camshaft sprocket securing bolt to
  45 Nm.
- Remove setting bar.
- Turn crankshaft two rotations in engine D.O.R. until crankshaft is set to TDC No. 1 cylinder again.
- Check if
  the TDC mark on flywheel
  the setting bar on camshaft
  the mandrel 2064 in injection pump sprocket
  the tensioning roller setting (notch/raised mark)
  align/are fitted correctly.

- If notch and raised mark do not align, tension the tensioning roller. To do this, hold tensioning roller with pin wrench Matra V159, loosen securing nut, turn eccentric clockwise further until notch and raised mark align opposite one another and tighten securing nut to 20 Nm.
- Turn crankshaft two rotations in engine D.O.R. until crankshaft is set to TDC No. 1 cylinder again.
- Repeat check.
- Install toothed belt guard, vibration damper, belt pulley, and cylinder head cover.
- Install ribbed belt => Page 26 .
- Checking injection pump commencement of delivery:

=> Repair group 23; Servicing Diesel direct injection system; Dynamically checking and adjusting injection pump commencement of delivery. Servicing Diesel direct injection system Dynamically checking and adjusting injection pump commencement of delivery.

Protected by copyright. Copying for private or commercial purposes, in part or in whole, is not permitted unless authorised by Volkswagen AG. Volkswagen AG does not guarantee or accept any liability with respect to the correctness of information in this document. Copyright by Volkswagen AG.

satelettronica

Belt drive with two part injection pump sprocket

Removing

Engine code 1Y

- Remove ribbed belt => Page 26 .
- If fitted remove ribbed belt tensioning roller.

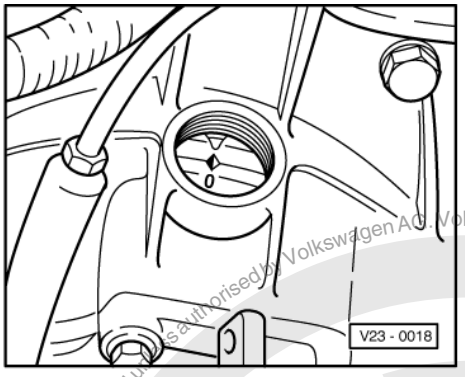

- Remove upper toothed belt guard and cylinder head cover.
- -> Turn crankshaft to TDC No. 1 cylinder -arrow-.

Engine removed:

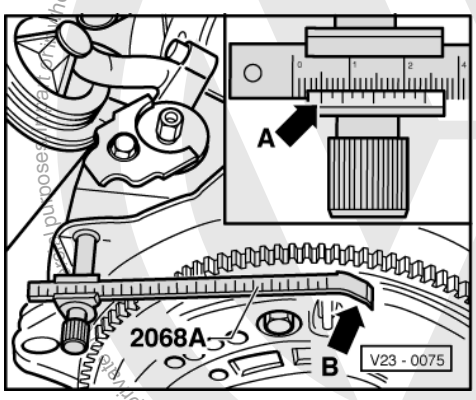

- -> Install adjustment device 2068 A as shown.
- Set adjustment device to 5 mm -arrow A-. The left-hand notch of the scale is the reference point.
- Turn crankshaft until flywheel TDC marking aligns with point of setting device -arrow B-.

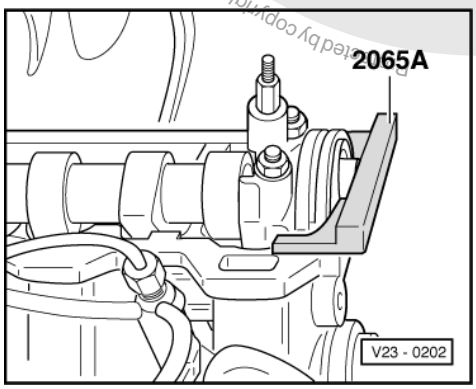

- -> Lock camshaft with setting bar.
- Centralize setting bar as follows:
  Turn camshaft so that one end of setting bar contacts the cylinder head. Using feeler gauge establish the gap at the other end of the setting bar. Place a feeler gauge corresponding to half the gap between setting

Volkswagen AG does not guarantee or accept any liability with respect to the correctness of information in this document. Copyright by Volkswagen AG.
satelettronica

bar and cylinder head. Turn camshaft until the setting bar contacts the feeler gauge. Place a 2nd feeler gauge, of same thickness, at the other end between setting bar and cylinder head.

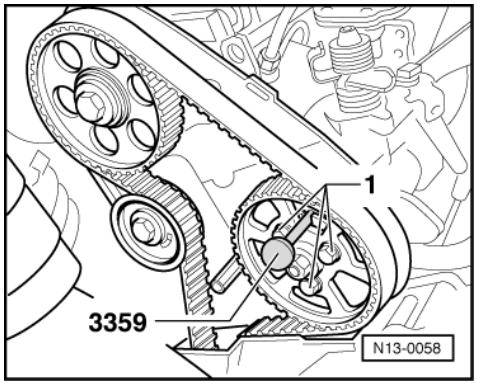

- -> Lock injection pump sprocket with pin 3359.
- Loosen injection pump sprocket securing bolts -1-.
- Loosen tensioner.
- Remove coolant pump pulley (use V.A.G 1590 to loosen and tighten the securing bolt).
- Remove vibration damper and belt pulley.
- Remove lower toothed belt guard.
- Mark D.O.R. of toothed belt.
- Take off toothed belt.

Installing

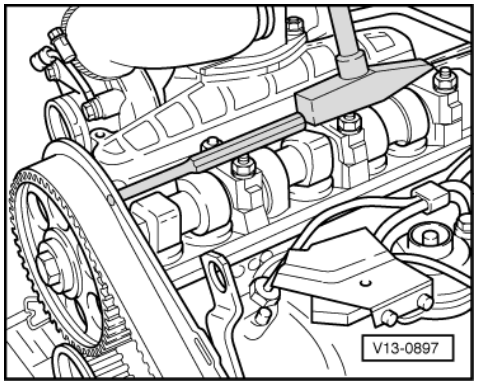

- Check whether TDC mark on flywheel and reference mark are aligned.

Note:

Never use setting bar as a counter hold when loosening and tightening the camshaft sprocket, use retainer 3036.

- -> Loosen camshaft sprocket securing bolt 1/2 turn. Release camshaft sprocket from camshaft taper by tapping with a hammer (using a drift through rear toothed belt guard opening).

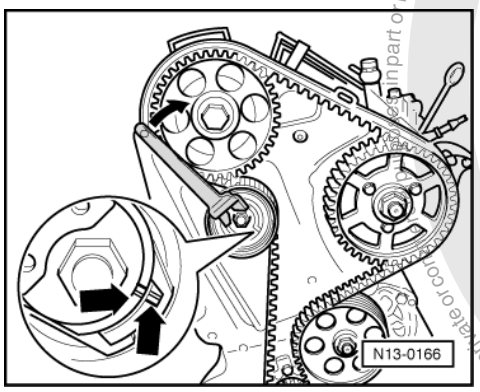

Protected by copyright. Copying for private or commercial purposes, in part or in whole, is not permitted unless authorised by Volkswagen AG. Volkswagen AG does not guarantee or accept any liability with respect to the correctness of information in this document. Copyright by Volkswagen AG.
satelettronica

- Fit toothed belts (note D.O.R.) on crankshaft toothed belt sprocket, intermediate wheel, injection pump sprocket and tensioning roller.
- Fit camshaft sprocket together with toothed belt and locate with securing bolt (camshaft sprocket can still turn).
- -> Turn tensioning roller with pin wrench (e.g. Matra V159) to right until notch aligns with raised portion (arrows).
- Tighten lock nut on tensioning roller.
  Tightening torque: 20 Nm
- Check again whether TDC mark on flywheel and reference mark are aligned.
- Tighten camshaft sprocket securing bolt to 45 Nm.
- Tighten injection pump sprocket securing bolts to 25 Nm.
- Remove setting bar.
- Remove pin.
- Turn crankshaft two rotations in engine D.O.R. and set again to TDC No. 1 cylinder.

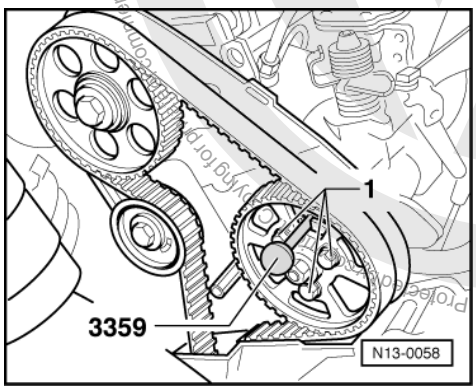

- -> Check whether injection pump sprocket can be locked with pin 3359.

If the injection pump sprocket cannot be locked:

- Loosen injection pump securing bolts -1-.
- Turn injection pump sprocket hub until the pin fits.

- Tighten injection pump sprocket securing bolts to 25 Nm.

- Install toothed belt guard, vibration damper (note fixing), V-belt pulley tensioning roller, coolant belt pulley and cylinder head cover.
- Install ribbed belt => Page 26 .

1.4 - Checking semi-automatic toothed belt tensioning roller

Test sequence

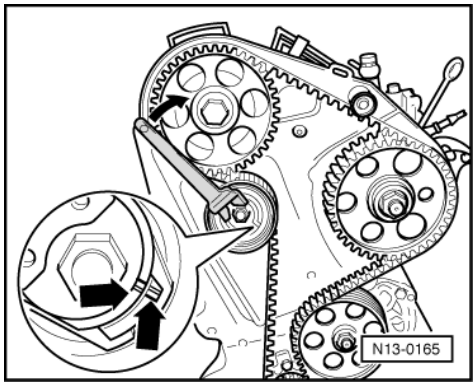

satelettronica

- -> Tension toothed belt with firm thumb pressure.
  Notch and raised portion -arrows- must move apart.
- Release thumb pressure on toothed belt. The tensioning roller must move back to its initial position. (Notch and raised portion align again).

1.5 - Removing single part injection pump sprocket

Special tools, workshop equipment, testers, measuring instruments and auxiliary items required

- Puller 3032

Removing

- Remove injection pump sprocket securing nut.

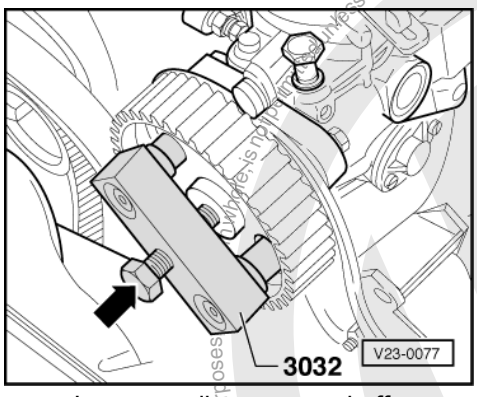

- -> Loosen puller arms and offer up.
- Locate puller arms through holes in injection pump sprocket and tighten.
- Place injection pump sprocket under tension with puller.
- Release injection pump sprocket from injection pump taper by tapping on spindle of puller -arrow- (thereby hold sprocket so that it does not fall off).

Protected by copyright. Copying for private or commercial purposes, in part or in whole, is not permitted unless authorised by Volkswagen AG. Volkswagen AG does not guarantee or accept any liability with respect to the correctness of information in this document. Copyright by Volkswagen AG.
satelettronica

2 - Removing and installing sealing flange and pressure plate/flywheel/drive plate

2.1 - Removing and installing sealing flange and pressure plate/flywheel/drive plate

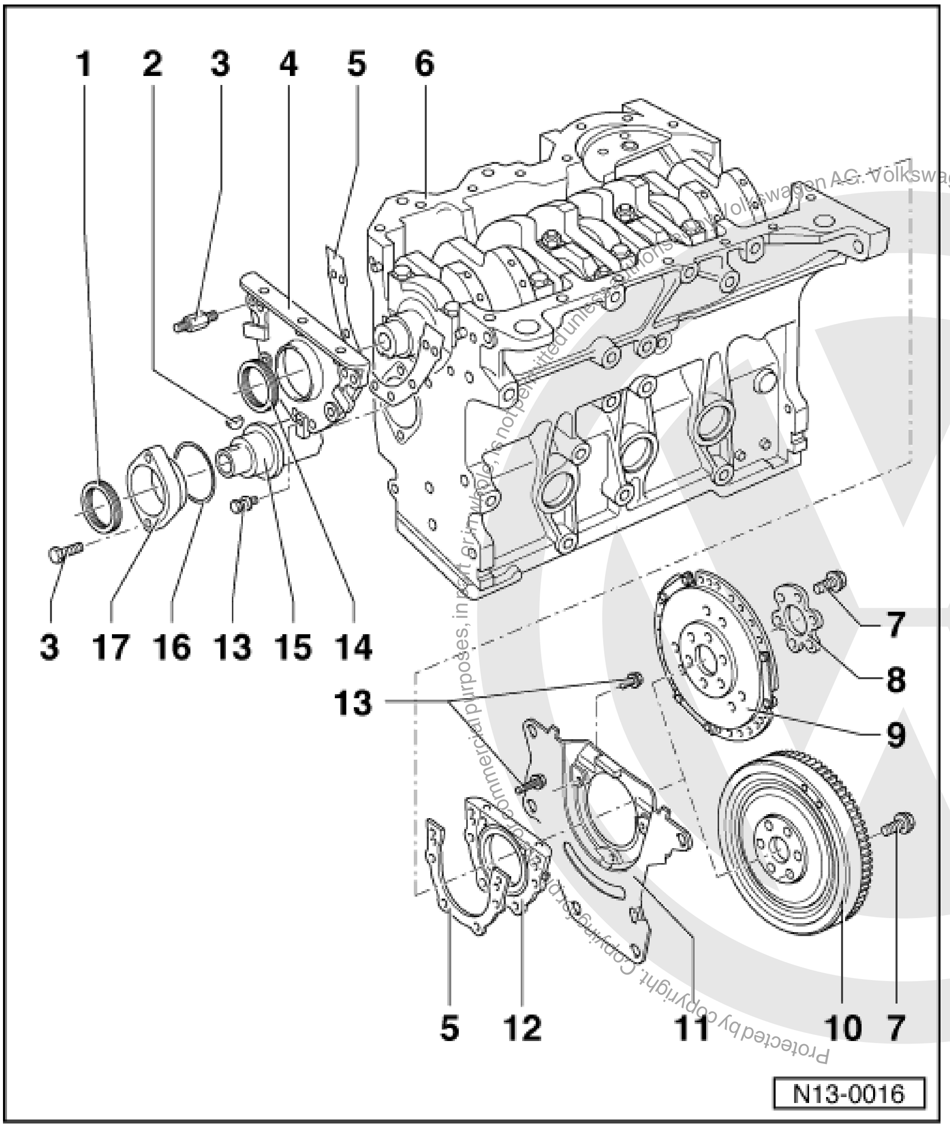

Protected by copyright. Copying for private or commercial purposes, in part or in whole, is not permitted unless authorised by Volkswagen AG. Volkswagen AG does not guarantee or accept any liability with respect to the correctness of information in this document. Copyright by Volkswagen AG.

sateletronica

Note:

For repairs to the clutch:

=> 5 Speed manual gearbox 02A; Repair group 30; servicing clutch servicing clutch

=> 5 Speed manual gearbox 020; Repair group 30; servicing clutch servicing clutch

1 Oil seal
- To remove oil seal, remove sealing flange
- Install with 10-203
- Lightly oil sealing lip

2 Woodruff key
- Ensure tight fit

3 25 Nm

4 Sealing flange

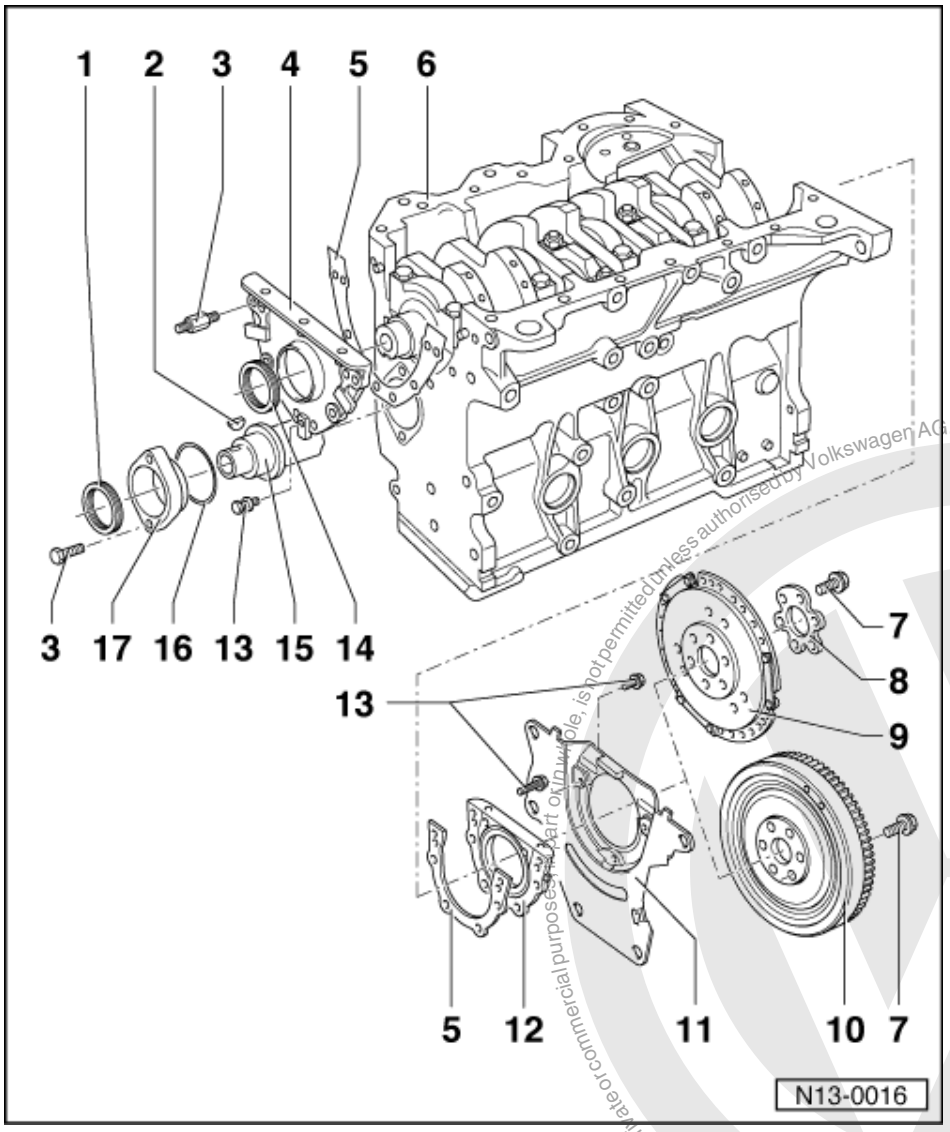

5 Gasket
- Renew

6 Cylinder block
- Removing and installing crankshaft => Page 42
- Dismantling and assembling pistons and conrods => Page 46

7 60 Nm + 1/4 turn (90 °) further
- Renew

8 Plate
- Observe fitting position

9 Pressure plate/drive plate
- Engine codes: AEY, AHB, AKW, 1Y
- Removing and installing pressure plate =>Fig. 1

Protected by copyright. Copying for private or commercial purposes, in part or in whole, is not permitted unless authorised by Volkswagen AG. Volkswagen AG does not guarantee or accept any liability with respect to the correctness of information in this document. Copyright by Volkswagen AG.
satelettronica

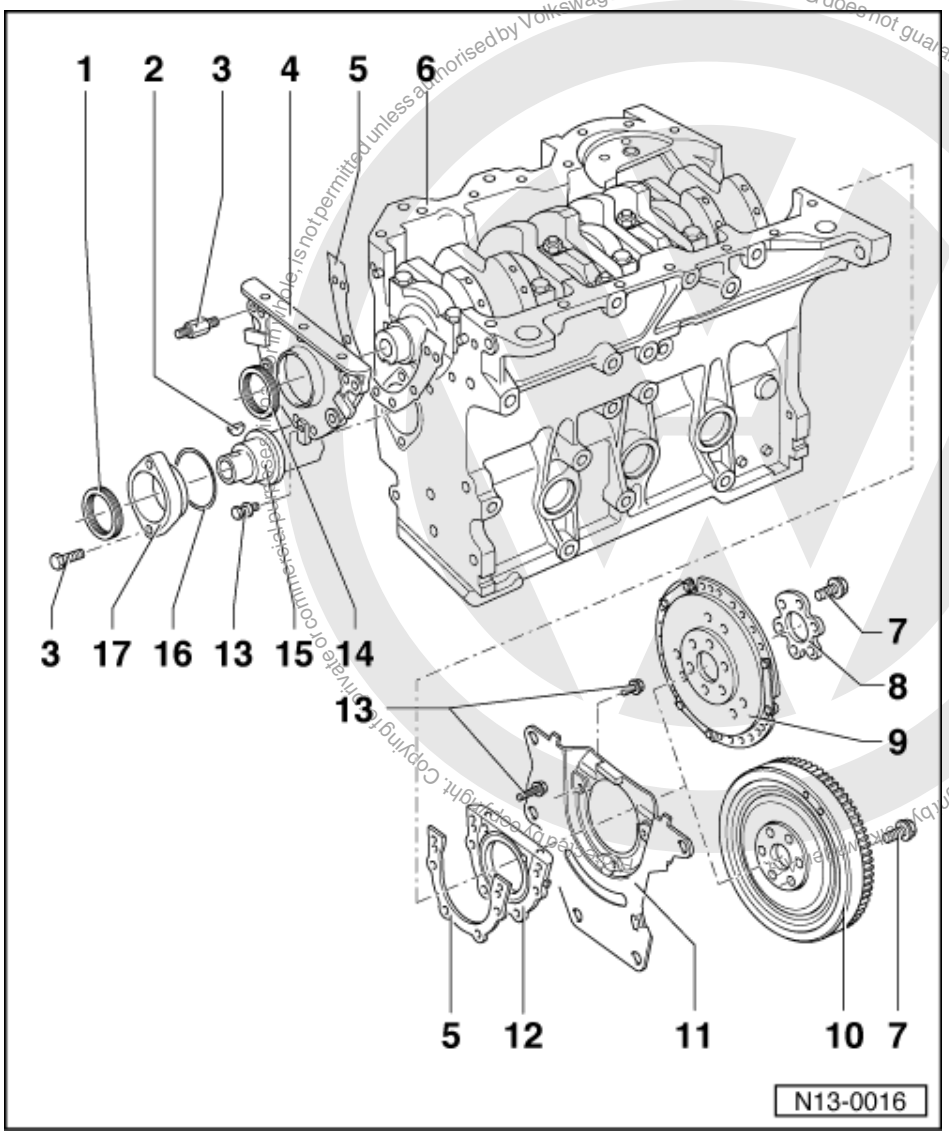

10 Flywheel/drive plate
- Only engine codes AFN, AHU, ALE
- To remove and install, hold flywheel with 3067

11 Intermediate plate
- Must be located on dowel sleeves
- Do not damage/bend when assembling

12 Sealing flange with oil seal
- Only renew complete
- Lightly oil sealing lip of oil seal

13 10 Nm

14 Oil seal
- Renewing => Page 40

15 Intermediate shaft

16 O-ring
- Renew if damaged

17 Sealing flange intermediate shaft

Volkswagen AG. Volkswagen AG does not guarantee or accept any liability with respect to the correctness of information in this document. Copyright by Volkswagen AG. Copying for private or commercial purposes, in part or in whole, is not permitted unless authorised by Volkswagen AG. Copyright. Copyright by Volkswagen AG.
satelettronica

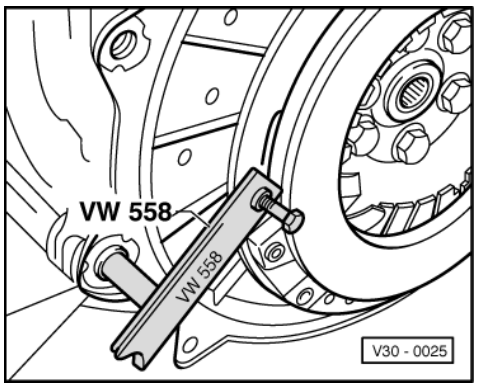

-> Fig.1 Removing and installing pressure plate

2.2 - Renewing crankshaft oil seal - pulley end -

Removing

- Remove ribbed belt => Page 26 .
- Remove toothed belt => Page 29 .
- Remove crankshaft sprocket. To do this counter-hold sprocket with 3099.

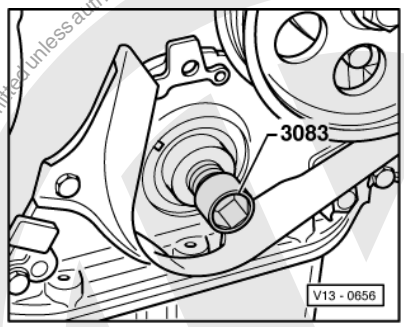

- -> To guide the oil seal extractor, screw bolt from fitting tool 3083 into crankshaft onto stop.
  Unscrew inner part of the oil seal extractor 2085 two turns (approx. 3 mm) out of the outer part and lock with knurled screw.

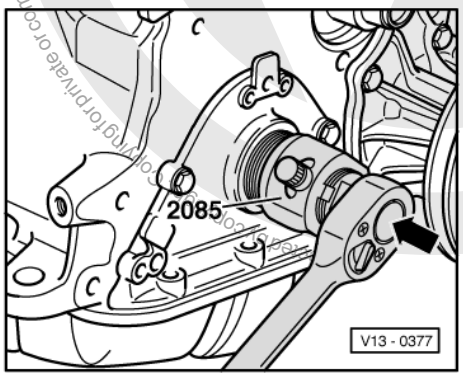

- -> Lubricate threaded head of oil seal extractor, place it in position and exerting firm pressure screw it as far as possible into oil seal.

satelettronica

- Loosen knurled screw and turn inner part against crankshaft until the oil seal is pulled out.

Installing

- Lightly oil sealing lip of oil seal.

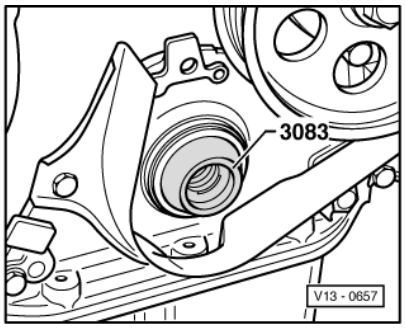

- -> Place guide sleeve from fitting tool 3083 onto crankshaft journal.
- Slide oil seal over guide sleeve.

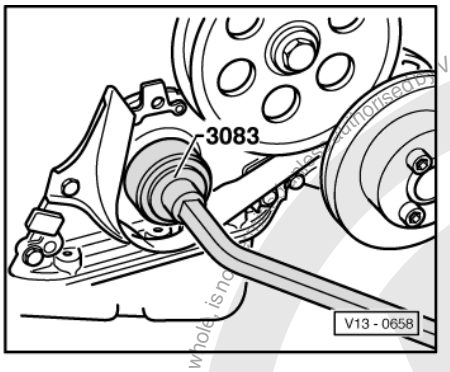

- -> Press oil seal in onto stop with press sleeve from fitting tool 3083.
- Install and tension toothed belt => Page 29

Protected by copyright. Copying for private or commercial purposes, in part or in whole, is not permitted unless authorised by Volkswagen AG. Volkswagen AG does not guarantee or accept any liability with respect to the correctness of information in this document. Copyright by Volkswagen AG.
satelettronica

3 - Removing and installing crankshaft

3.1 - Removing and installing crankshaft

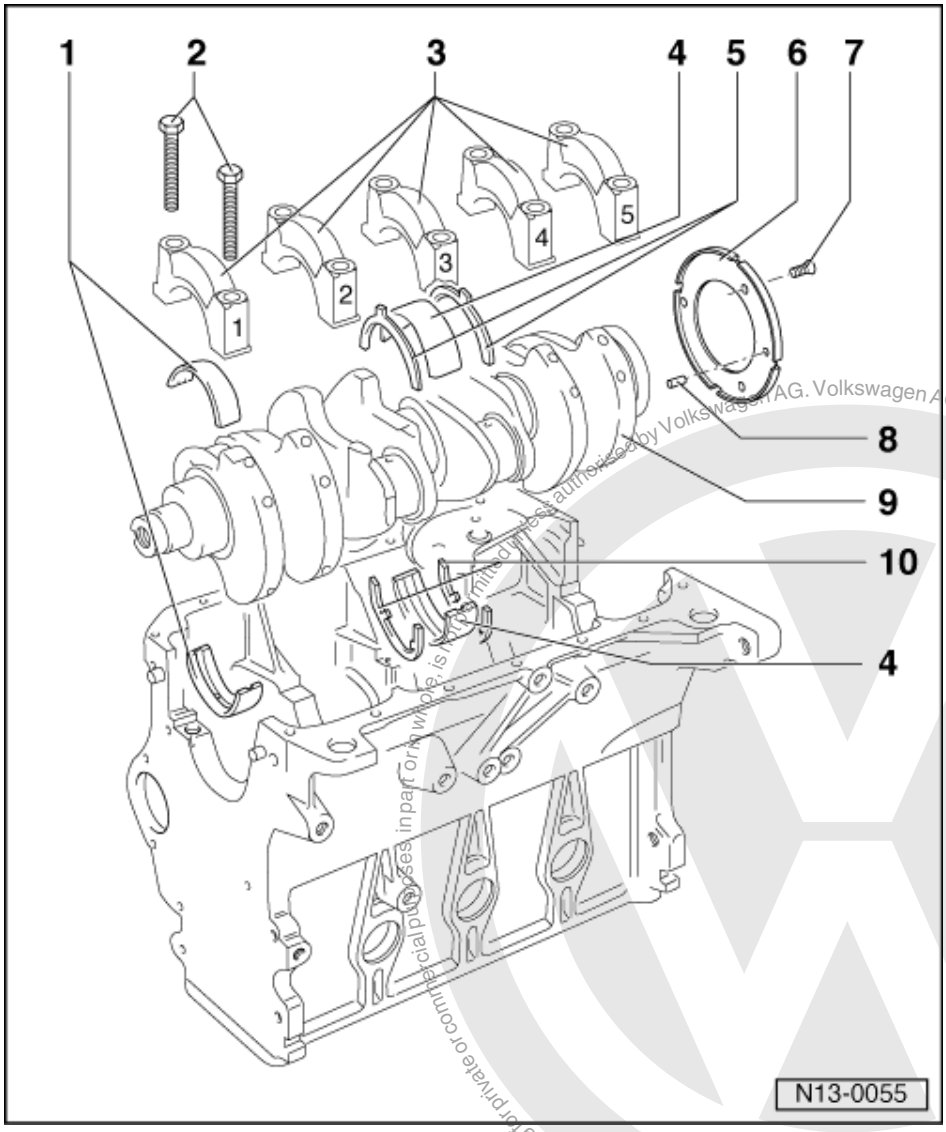

1 Bearing shells 1, 2, 4 and 5
- For bearing caps without oil groove
- For cylinder block with oil groove
- Do not interchange used bearing shells (mark)

2 65 Nm + 1/4turn (90 °) further
- Renew
- To measure radial clearance tighten to 65 Nm but not further

3 Bearing cap
- Bearing cap 1: Pulley end
- Bearing cap 3 with recesses for thrust washers
- Bearing shell retaining lugs (cylinder block/bearing cap) must be on the same side

Protected by copyright. Copying for private or commercial purposes, in part or in whole, is not permitted unless authorised by Volkswagen AG. Volkswagen AG does not guarantee or accept any liability with respect to the correctness of information in this document. Copyright by Volkswagen AG.
satelettronica

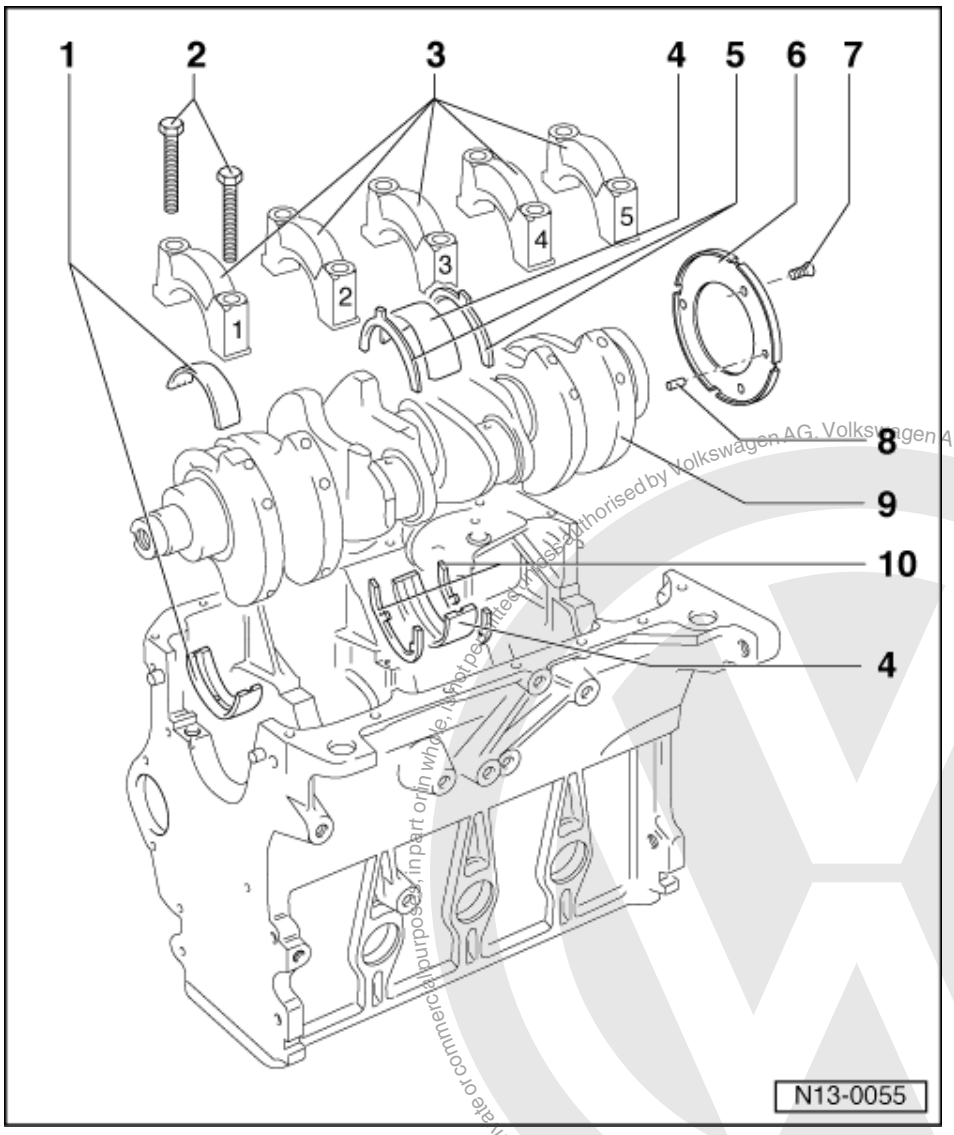

4 Bearing shell 3
- For bearing cap without oil groove
- For cylinder block with oil groove

5 Thrust washer
- For bearing cap 3
- Note fixing arrangement

6 Sender wheel
- For speed sender
- Only engine codes AEY, AFN, AHB, AHU, AKW, ALE

7 10 Nm + 1/4 turn (90 °) further
- Renew

8 Fitted pin
- Only engine codes AEY, AFN, AHB, AHU, AKW, ALE
- Checking projection from crankshaft => Fig. 1

Protected by copyright. Copying for private or commercial purposes, in part or in whole, is not permitted unless authorised by Volkswagen AG. Volkswagen AG does not guarantee or accept any liability with respect to the correctness of information in this document. Copyright by Volkswagen AG.
satelettronica

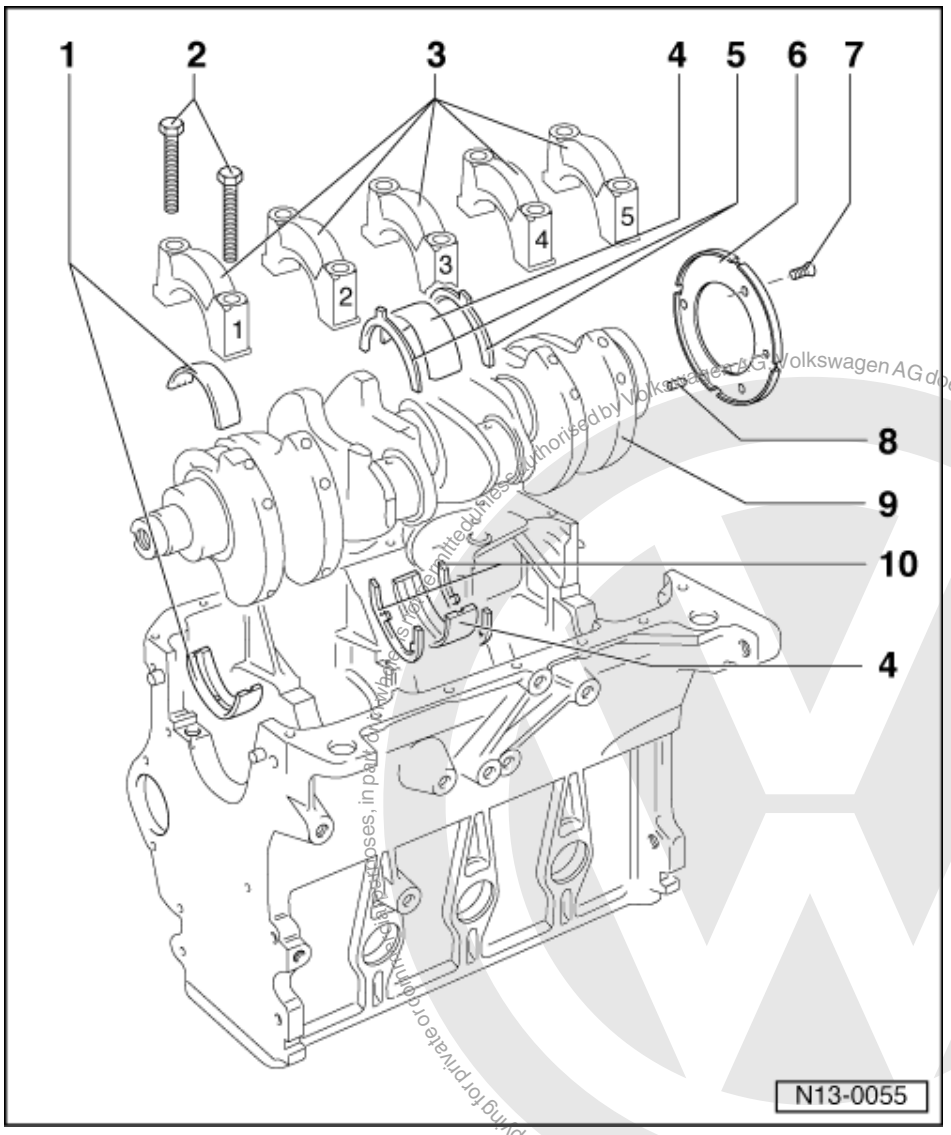

9 Crankshaft

- Axial clearance new: 0.07...0.17 mm
  Wear limit: 0.37 mm
- Check radial clearance with Plastigage
  New: 0.03...0.08 mm
  Wear limit: 0.17 mm
- Do not rotate the crankshaft when checking the radial clearance
- Crankshaft dimensions
  => Page 45

10 Thrust washer

- For cylinder block, bearing 3

Protected by copyright. Copying for private or commercial purposes, in part or in whole, is not permitted unless authorised by Volkswagen AG. Volkswagen AG does not guarantee or accept any liability with respect to the correctness of information in this document. Copyright by Volkswagen AG.
satelettronica

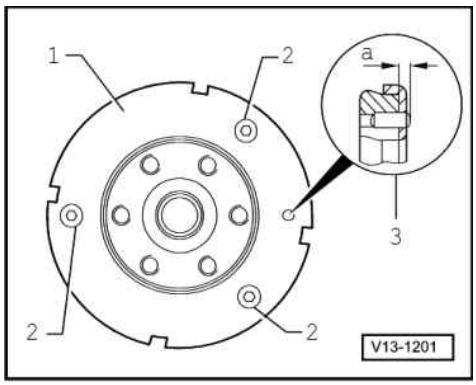

-> Fig. 1 Checking fitted pin projection out of crankshaft

Dowel pin projection -3- out of crankshaft
a =2.5...3.0 mm

3.2 - Crankshaft dimensions

(in mm)

Honing dimension	Main journal -ø	Conrod journal-ø
Basic dimension	-0.022 54.00 -0.042	-0.022 47.80 -0.042
1st undersize	-0.022 53.75 -0.042	-0.022 47.55 -0.042
2nd undersize	-0.022 53.50 -0.042	-0.022 47.30 -0.042
3rd undersize	-0.022 53.25 -0.042	-0.022 47.05 -0.042

Protected by copyright. Copying for private or commercial purposes, in part or in whole, is not permitted unless authorised by Volkswagen AG. Volkswagen AG does not guarantee or accept any liability with respect to the correctness of information in this document. Copyright by Volkswagen AG.
satelettronica

4 - Dismantling and assembling pistons and conrods

4.1 - Dismantling and assembling pistons and conrods

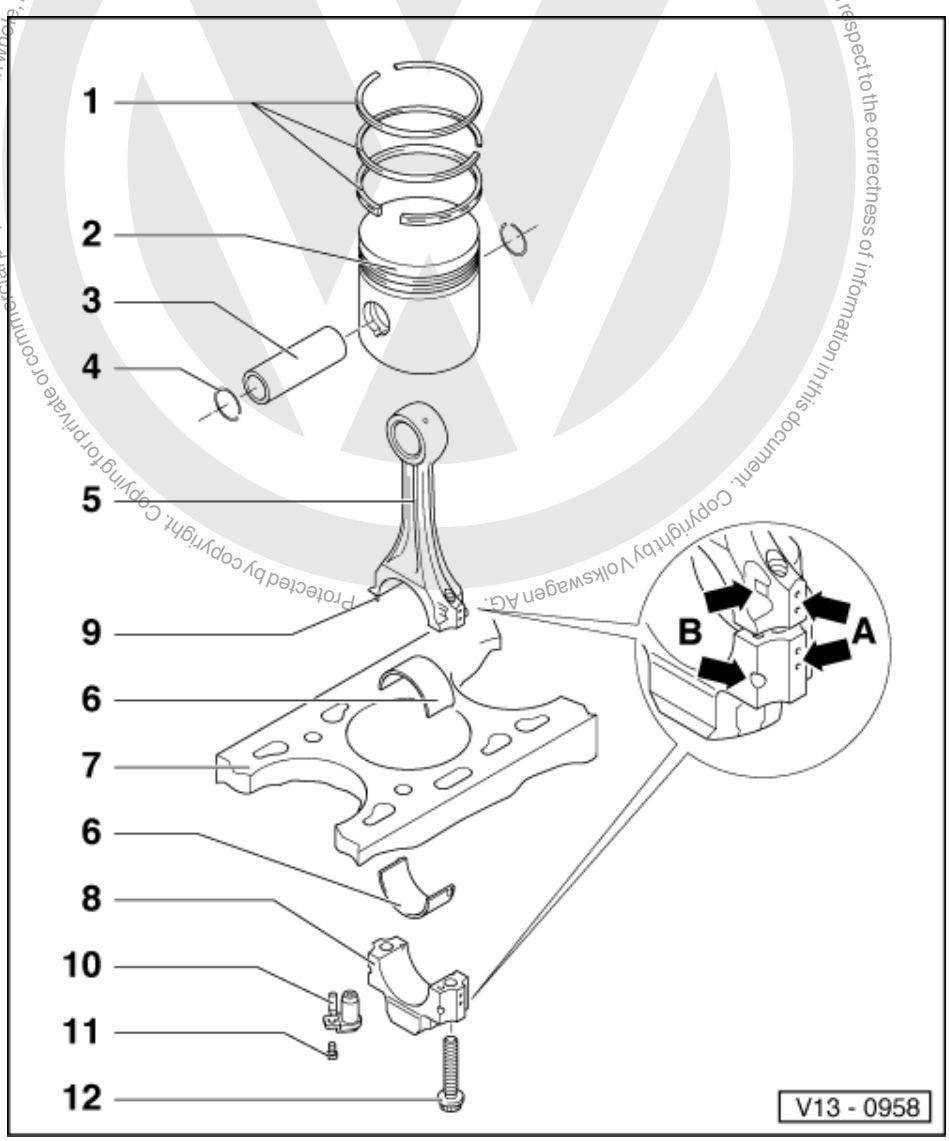

1 Piston ring

- Offset gaps by 120 °
- Remove and install with piston ring pliers
- "TOP" faces towards piston crown
- Checking ring gap=> Fig. 1
- Checking ring to groove clearance
  => Fig. 2

satelettronica

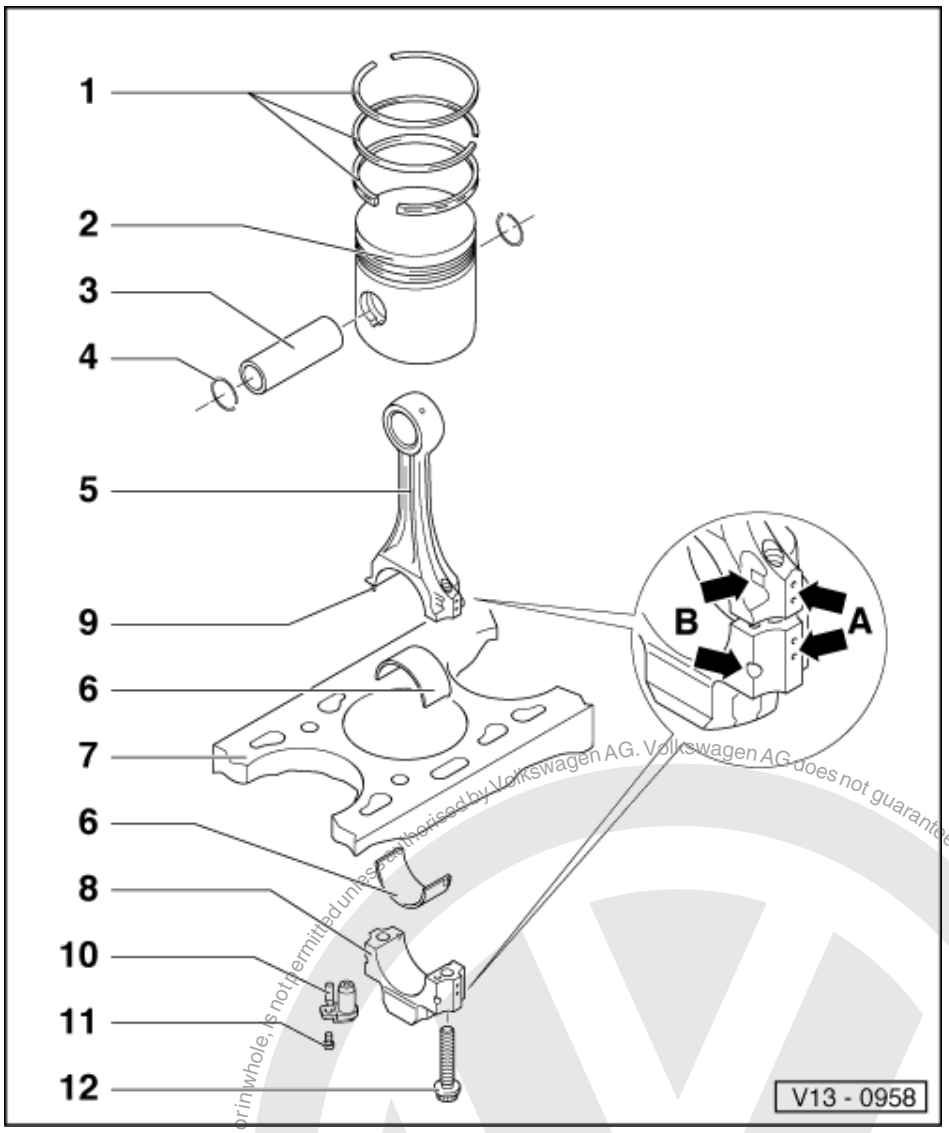

2 Piston

- Engine codes AEY, AFN, AHB, AHU, AKW and ALE with combustion chamber
- Mark installation position and cylinder number
- Mark installation position and allocation piston/cylinder for engine codes AEY, AFN, AHB, AHU, AKW and ALE => Fig. 4
- Arrow on piston crown points to pulley end
- Install using piston ring clamp
- Cracks on piston skirt, renew piston
- Checking piston projection at TDC =>Page 53

Protected by copyright. Copying for private or commercial purposes, in part or in whole, is not permitted unless authorised by Volkswagen AG. Volkswagen AG does not guarantee or accept any liability with respect to the correctness of information in this document. Copyright by Volkswagen AG.
satelettronica

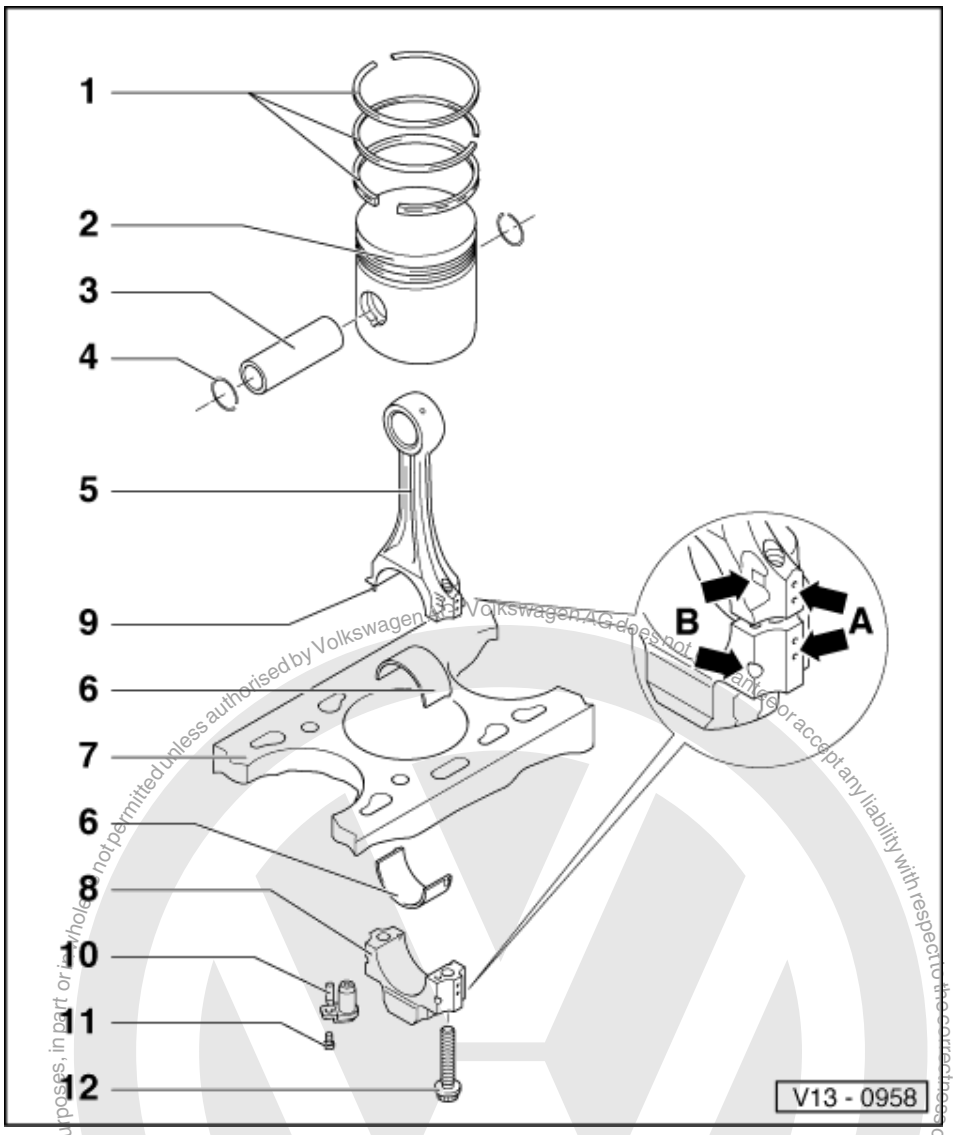

3 Piston pin
- If difficult to remove, heat piston to 60 °C
- Remove and install with VW 222a
- ø = 26 mm for engine codes AEY, AFN, AHU, ALE
  ø = 24 mm for engine codes AHB, AKW, 1Y

4 Circlip

5 Conrod
- Only renew as a set
- Mark cylinder number -A-
- Installation position:
  Marking -B- faces towards pulley end
- Length:
  Engine codes
  AEY, AFN, AHU, ALE = 144 mm
  AHB, AKW, 1Y = 150 mm

Protected by Copyright. Copying for private or commercial purposes, in part or in whole, is not permitted unless authorised by Volkswagen AG. Volkswagen AG does not guarantee or accept any liability with respect to the correctness of information in this document. Copyright by Volkswagen AG.
satelettronica

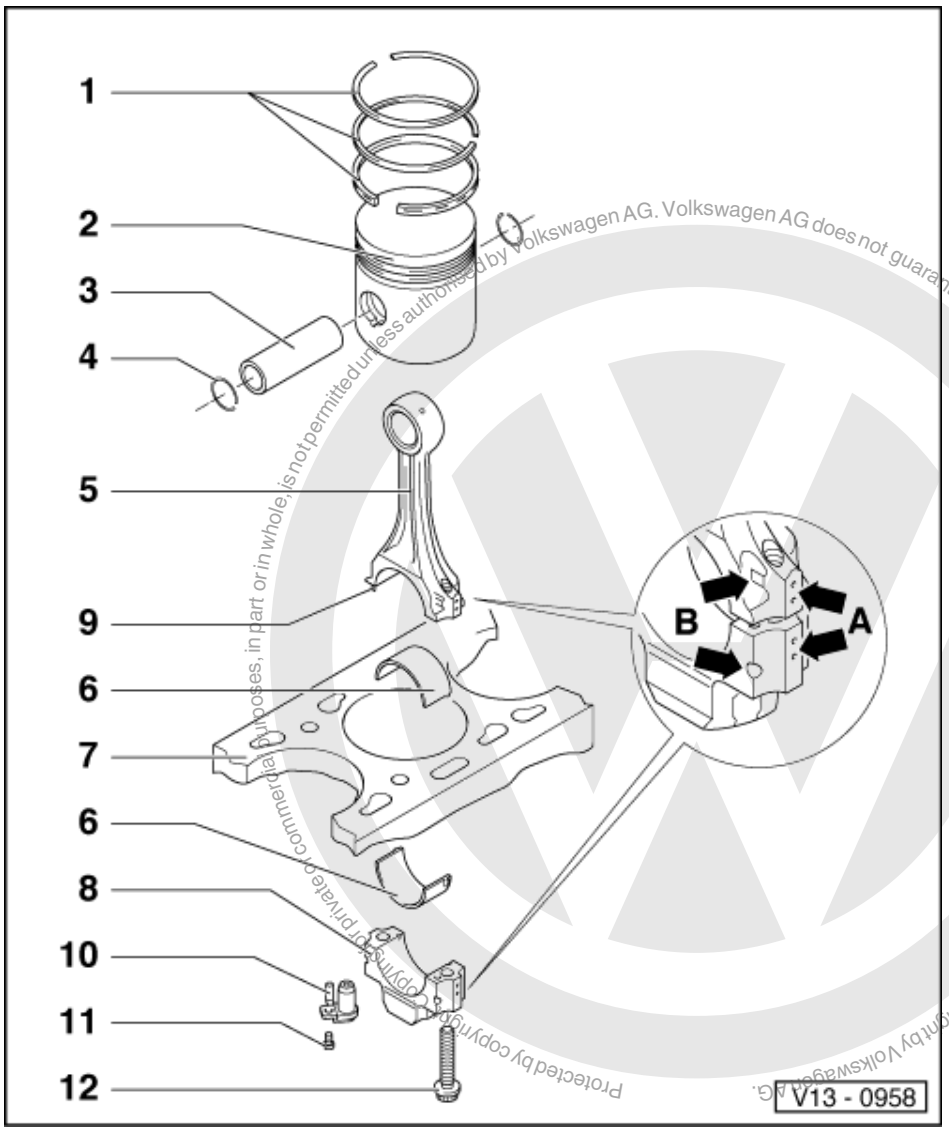

Protected by copyright. Copyright by Volkswagen AG. Volkswagen AG does not guarantee or accept any liability with respect to the correctness of information in this document. Copyright by Volkswagen AG. Copying for private or commercial purposes, in part or in whole, is not permitted unless authorised by Volkswagen AG.

6 Bearing shell

- Note installation position
- Do not interchange used bearing shells
- Ensure retaining lugs fit tightly in recesses
- Axial clearance
  Wear limit: 0.37 mm
- Check radial clearance with Plastigage:
  Wear limit: 0.08 mm
  Do not rotate crankshaft when checking radial clearance
- Width:
  Engine codes
  AEY, AFN, AHU, ALE = 20 mm
  AHB, AKW, 1Y = 19 mm

7 Cylinder block

- Checking cylinder bores
  =>Fig. 3
- Piston and cylinder dimensions
  =>Page 54

satelettronica

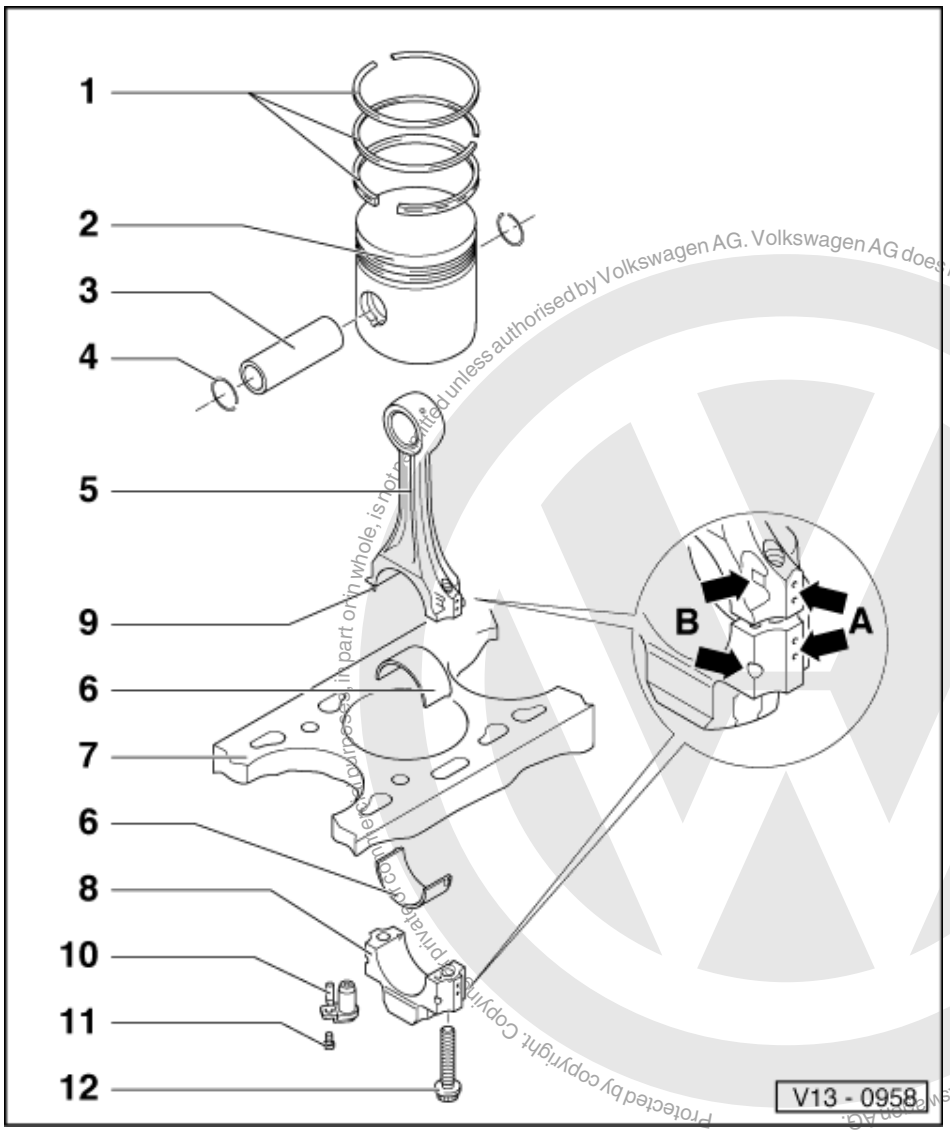

8 Conrod bearing cap
- Note installation position

9 Fitted pin
- The fitted pin must seat securely in the conrod, not in the bearing cap

10 Oil spray jet
- For piston cooling

11 10 Nm
- Install with AMV 188 100 02

12 Conrod bolt, 30 Nm + 1/4 turn (90 °) further
- Renew
- Oil threads and contact surface
- To measure radial clearance use old bolts

Protected by copyright. Copyright by Volkswagen AG. Volkswagen AG does not guarantee or accept any liability with respect to the correctness of information in this document. Copyright by Volkswagen AG. Reproduction, in part or in whole, is not permitted unless authorised by Volkswagen AG.
satelettronica

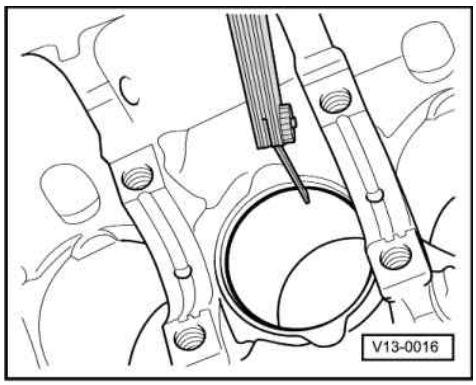

-> Fig. 1 Checking piston ring gap

- Push ring squarely from above down to approx. 15 mm from bottom end of cylinder.

Piston ring Dimensions in mm	New	Wear limit
1st compression ring AEY, AFN, AHB, AHU, AKW, ALE 1Y	0.20...0.40 0.20...0.40	1.0 1.2
2nd compression ring AEY, AFN, AHB, AHU, AKW, ALE 1Y	0.20...0.40 0.20...0.40	1.0 0.6
Oil scraper ring AEY, AFN, AHB, AHU, AKW, ALE 1Y	0.25...0.50 0.25...0.50	1.0 1.2

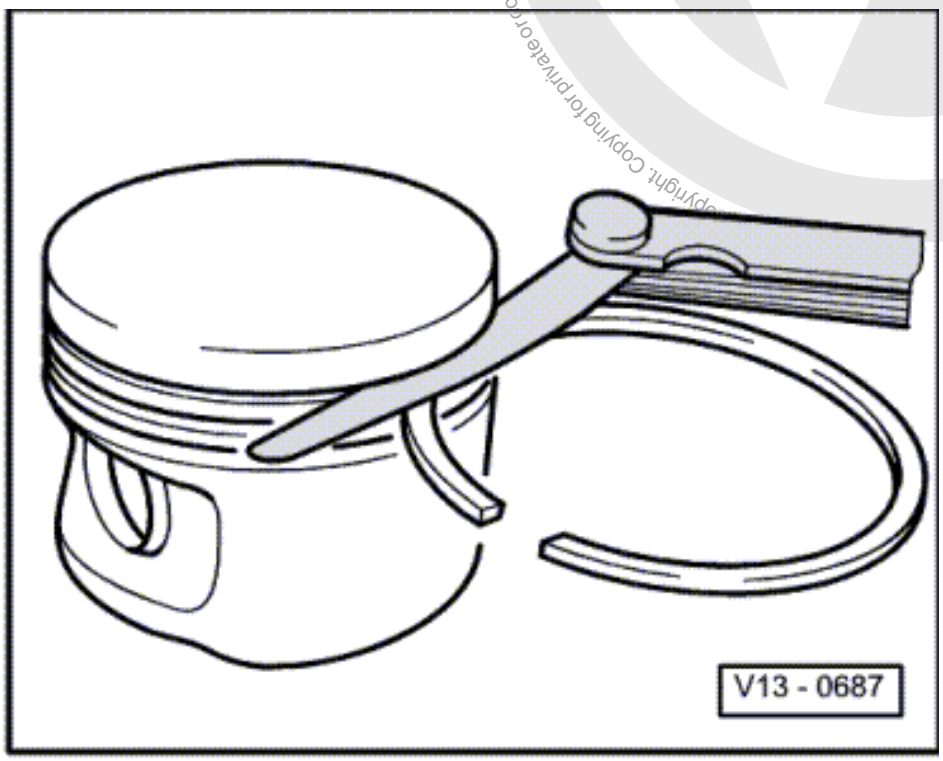

Copyright. Copying for private or commercial purposes, in part or in whole, is not permitted unless authorised by Volkswagen AG. Volkswagen AG does not guarantee or accept any liability with respect to the correctness of information in this document. Copyright by Volkswagen AG.
satelettronica

-> Fig. 2 Checking ring to groove clearance

Clean groove before check.

Piston ring Dimensions in mm	New	Wear limit
1st compression ring AEY, AFN, AHB, AHU, AKW, ALE 1Y	0.06...0.09 0.09...0.12	0.25 0.25
2nd compression ring	0.05...0.08	0.25
Oil scraper ring	0.03...0.06	0.15

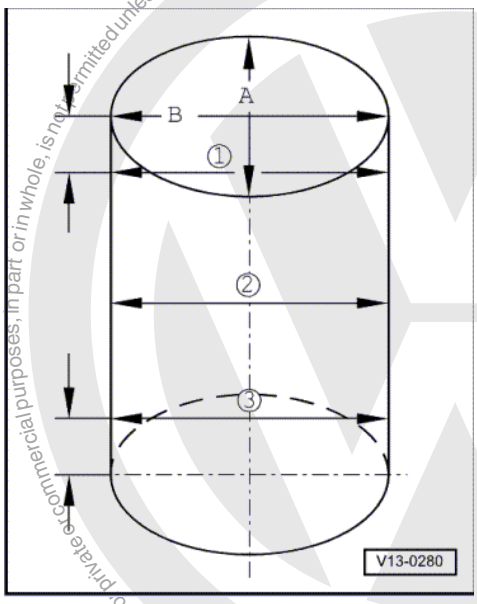

-> Fig. 3 Checking cylinder bores

Special tools, workshop equipment, testers, measuring instruments and auxiliary items required

- Internal dial gauge 50...100 mm

- Take measurements at 3 positions in both lateral -A- and longitudinal -B- directions, as illustrated. Deviation from nominal dimension
  max. 0.10 mm

Note:

Measuring the cylinder bores must not be done when the cylinder block is mounted on a repair stand with adapter bracket VW 540, as incorrect measurements would then be possible.

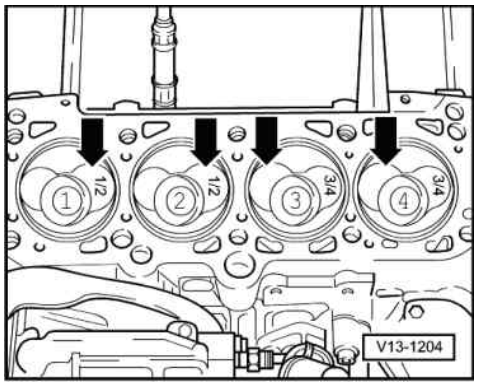

satelettronica

-> Fig.4 Piston installation position and piston/cylinder allocation

Piston in cylinders 1 and 2:

Larger inlet valve chamber towards flywheel -arrows-

Piston in cylinders 3 and 4:

Larger inlet valve chamber towards belt pulley side -arrows-.

Note:

New piston allocation to cylinders is shown by a coloured marking on piston crown.

- Piston for cylinder 1 and 2:
  marked 1/2
- Piston for cylinder 3 and 4:
  marked 3/4

4.2 - Checking piston projection at TDC

Special tools, workshop equipment, testers, measuring instruments and auxiliary items required

- VW 382/7
- VW 385/17

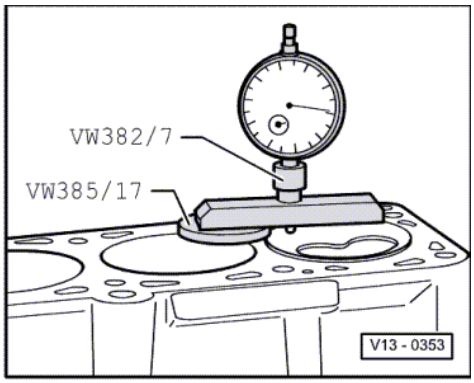

Test sequence

-> Piston projection at TDC must be measured when installing new pistons or a short engine. Depending upon piston projection, install the corresponding cylinder head gasket according to following table:

Engine codes AEY, AFN, AHB, AHU, AKW, ALE

Piston projection	Identification Holes/notches
0.91 mm ... 1.00 mm	1
1.01 mm ... 1.10 mm	2
1.11 mm ... 1.20 mm	3

Engine code 1Y

Piston projection	Identification Holes/notches
0.66 mm ... 0.86 mm	1

Protected by copyright. Copying for private or commercial purposes, in part or in whole, is not permitted unless authorised by Volkswagen AG. Volkswagen AG does not guarantee or accept any liability with respect to the correctness of information in this document. Copyright by Volkswagen AG.
satelettronica

Piston projection	Identification Holes/notches
0.87 mm ... 0.90 mm	2
0.91 mm ... 1.02 mm	3

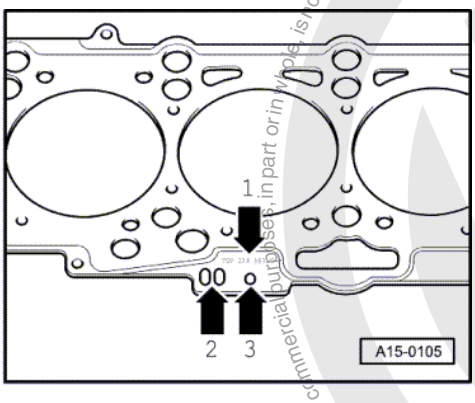

-> Cylinder head gasket identification

- Part No. = Arrow 1
- Control code = Arrow 2 (not relevant!)
- Holes/notches = Arrow 3

Note:

If differing figures are obtained when measuring piston projection, the highest figure should be taken when selecting the gasket.

4.3 - Piston and cylinder dimensions

Engine codes AEY, AFN, AHB, AHU, AKW, ALE

Honing dimension		Piston-ø	Cylinder bore-ø
Basic dimen.	mm	79.47	79.51
1st oversize	mm	79.72	79.76
2nd oversize	mm	79.97	80.01

Engine code 1Y

Honing dimension		Piston-ø	Cylinder bore-ø
Basic dimen.	mm	79.48	79.51
1st oversize	mm	79.73	79.76
2nd oversize	mm	79.98	80.01

Protected by copyright. Copying for private or commercial purposes, in part or in whole, is not permitted unless authorised by Volkswagen AG. Volkswagen AG does not guarantee or accept any liability with respect to the correctness of information in this document. Copyright by Volkswagen AG.
satelettronica

15 - Cylinder head, Valve gear

1 - Removing and installing cylinder head

1.1 - Removing and installing cylinder head

Checking compressions=> Page 62

Notes:

- When installing an exchange cylinder head with fitted camshaft, the contact surfaces between the bucket tappets and the cam must be oiled before installing the cylinder head cover.
- The plastic packing pieces for protecting the open valves must not be removed until immediately before fitting cylinder head.
- If the cylinder head is replaced, all the coolant in the system must also be renewed.

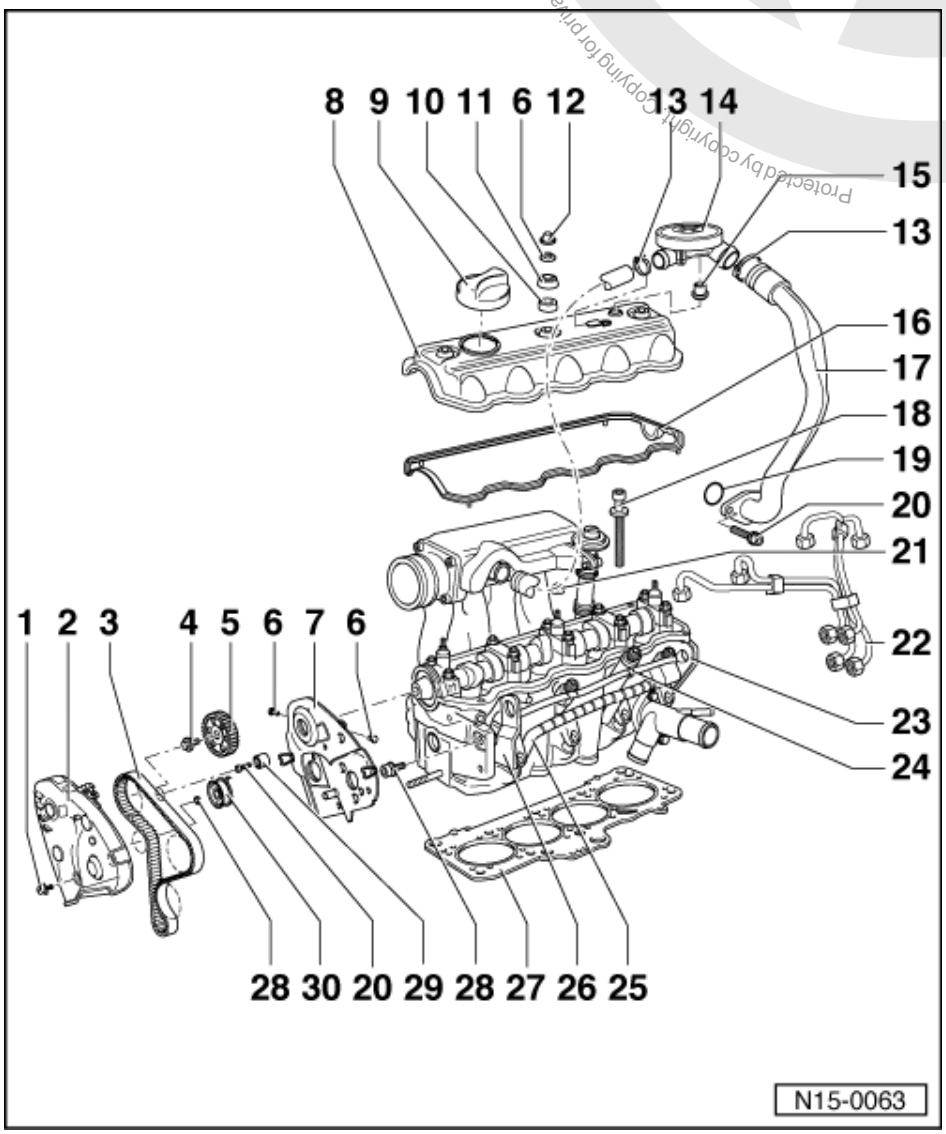

1 Expanding clip
2 Toothed belt guard - upper part
3 Toothed belt

satelettronica

- Mark D.O.R. before removing
- Check for wear
- Do not kink
- Removing, installing and tensioning
  => Page 29

4 45 Nm

5 Camshaft sprocket
- Drive off camshaft taper using hammer and drift through toothed belt guard openings

6 10 Nm

7 Rear toothed belt guard

8 Cylinder head cover

9 Cap
- Renew seal if damaged

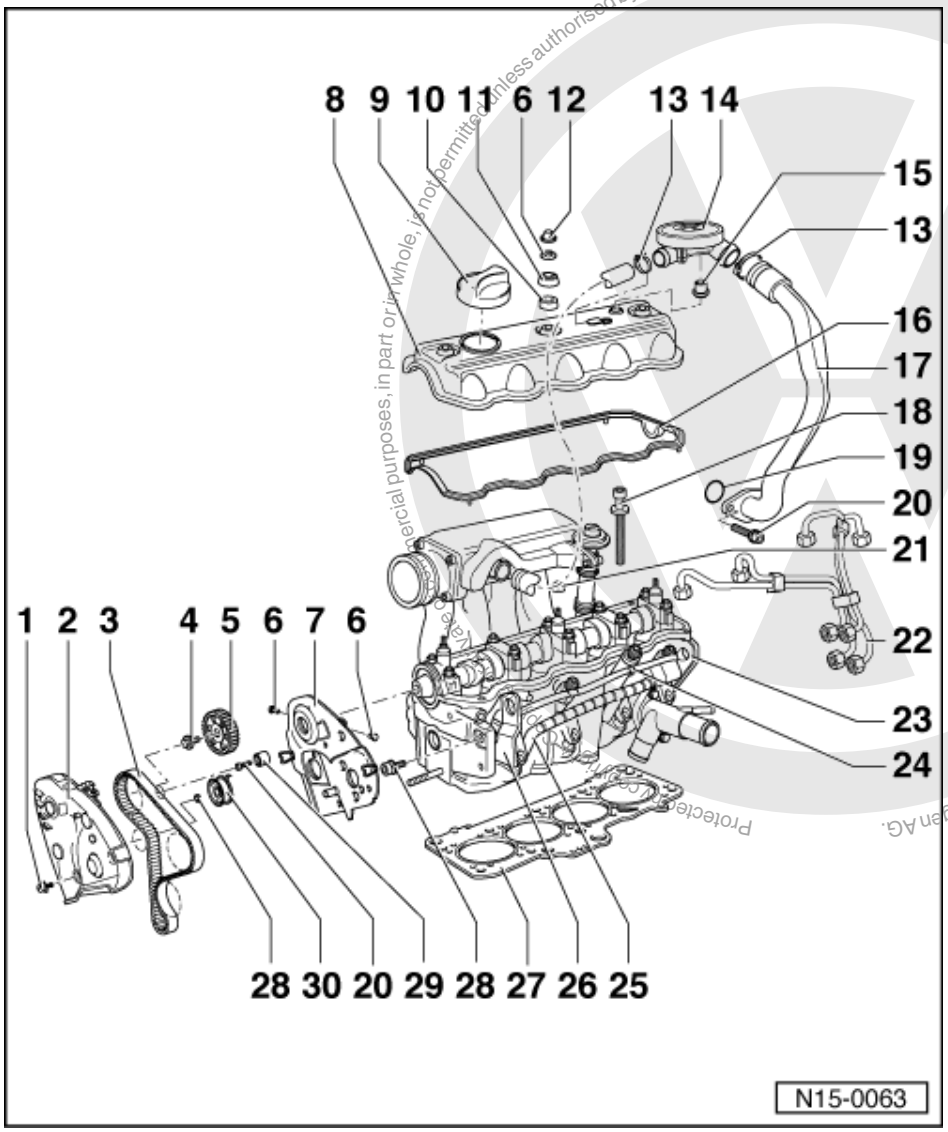

10 Upper sealing washer
- Renew if damaged

11 Dished washer

12 Cap

13 Retaining clip

14 Pressure regulating valve
- For crankcase breather

15 Gasket

Protected by copyright. Copying for commercial purposes, in part or in whole, is not permitted unless authorised by Volkswagen AG. Volkswagen AG does not guarantee or accept any liability with respect to the correctness of information in this document. Copyright by Volkswagen AG.
satelettronica

- Renew if damaged

16 Cylinder head cover gasket

- Renew if damaged
- Insert projections into holes on cylinder head
- Before fitting gasket coat transition between bearing cap/cylinder head with "D2"

17 Crankcase breather

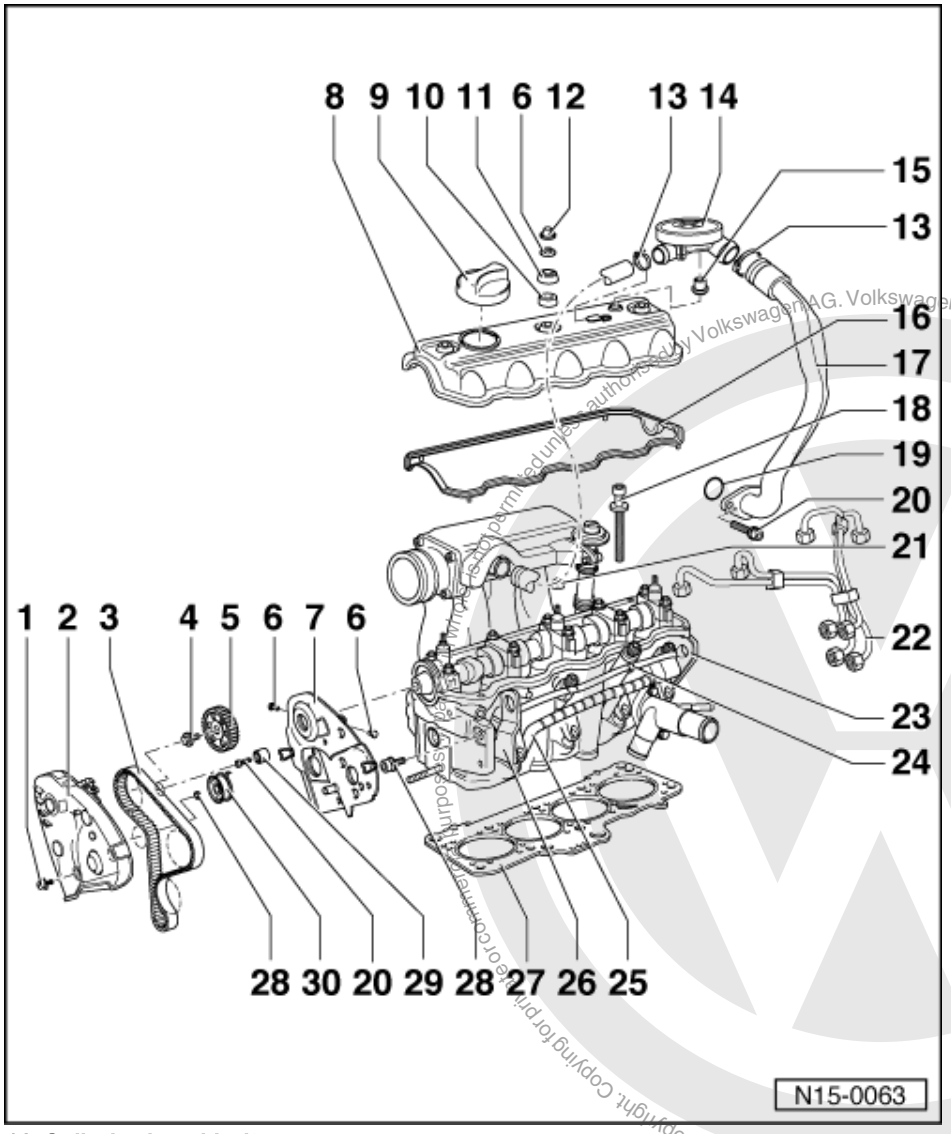

18 Cylinder head bolt

- Renew
- Note sequence when loosening and tightening
  => Page 60 , removing and installing cylinder head

19 O-ring

- Renew

20 25 Nm

21 Lower sealing cone

22 Injector pipes

- Tighten to 25 Nm
- Remove with open ring spanner 3035
- Always remove pipework complete
- Do not alter shape

23 Cylinder head

- Check for distortion => Fig. 1
- Removing and installing

Protected by copyright. Copying for private or commercial purposes, in part or in whole, is not permitted unless authorised by Volkswagen AG. Volkswagen AG does not guarantee or accept any liability with respect to the correctness of information in this document. Copyright by Volkswagen AG.
satelettronica

=> Page 60
- If replaced renew the complete coolant

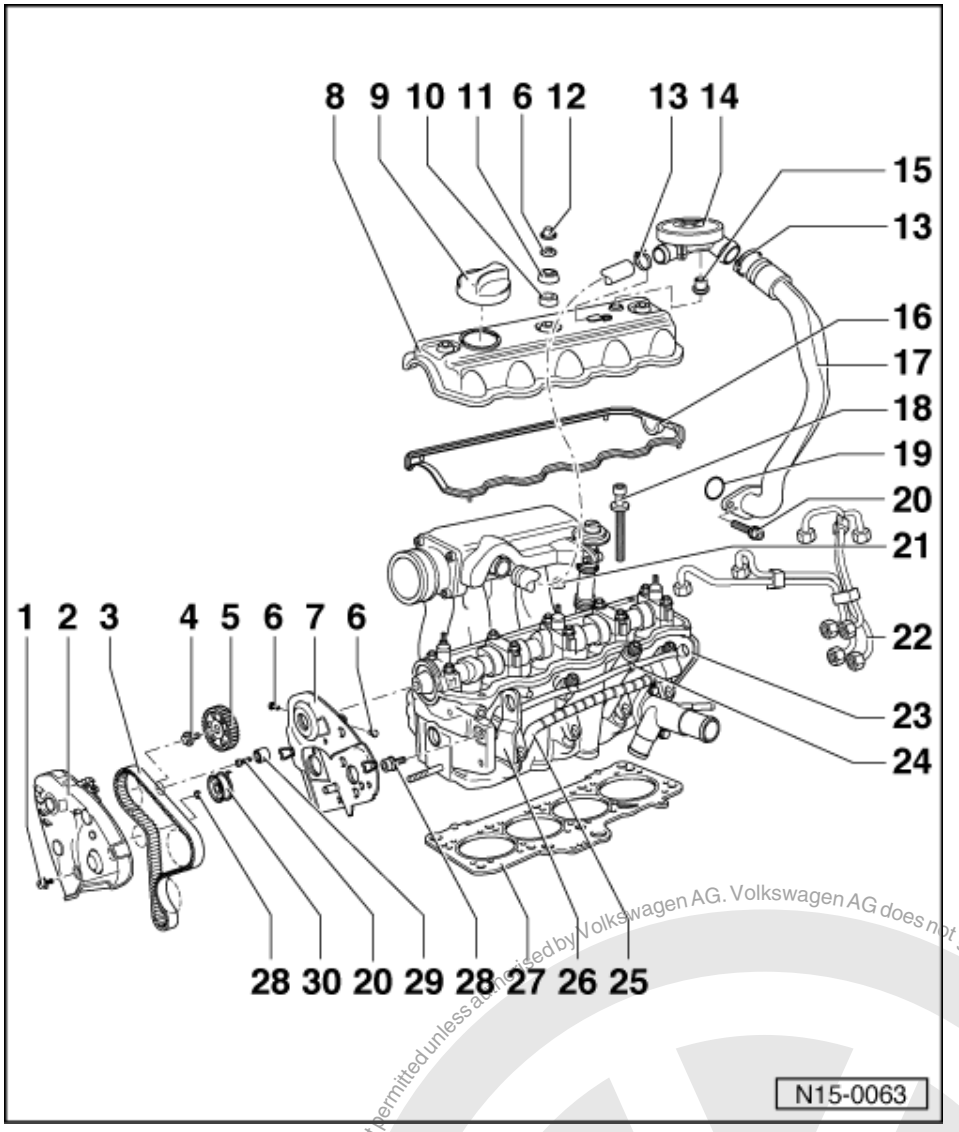

24 Injector

- Removing and installing for engine codes AEY, AFN, AHB, AHU, AKW, ALE

=> Repair group 23; Servicing Diesel direct system; Removing and installing injectors Servicing Diesel direct system Removing and installing injectors

- Removing and installing for engine code 1Y

=> Repair group 23; Servicing fuel injection system; Removing and installing injectors Servicing fuel injection system Removing and installing injectors

25 Glow plug

- For engine codes AEY, AFN, AHB, AHU, AKW, ALE tighten to 15 Nm, for engine code 1Y tighten to 25 Nm
- Checking

=> Repair group 28; Checking glow plug system; Checking glow plugs Checking glow plug system Checking glow plugs

26 Lifting eye

Protected by copyright. Copyright by Volkswagen AG.
Copying for private or commercial purposes, in part or in whole, is not permitted unless authorised by Volkswagen AG. Volkswagen AG does not guarantee or accept any liability with respect to the correctness of information in this document.
satelettronica

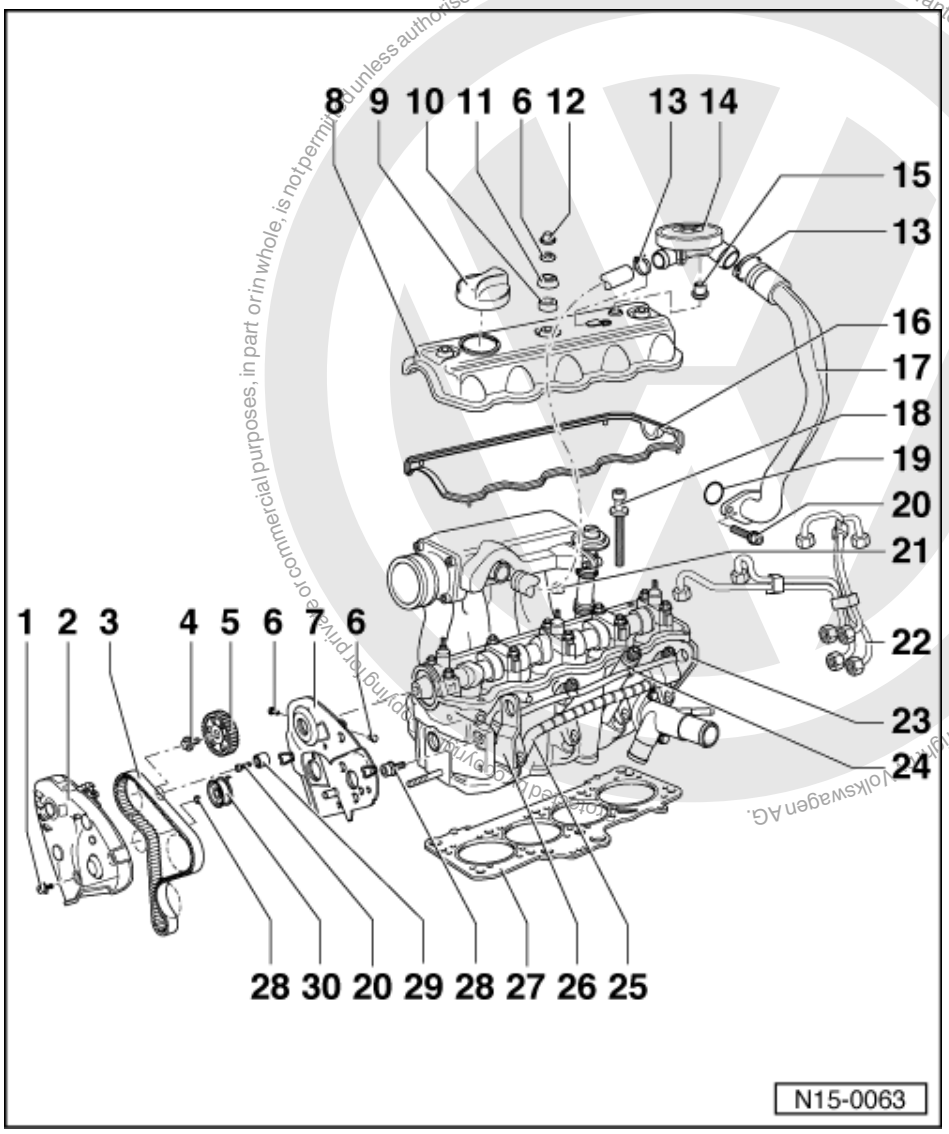

27 Cylinder head gasket

- Renew
- Note marking
  =>Fig. 2
- If replaced renew the complete coolant

28 20 Nm

29 Idler roller

- Only engine codes AEY, AFN, AHB, AHU, AKW, ALE

30 Tensioning roller

- Checking => Page 35
- Tensioning toothed belts
  => Page 29

satelettronica

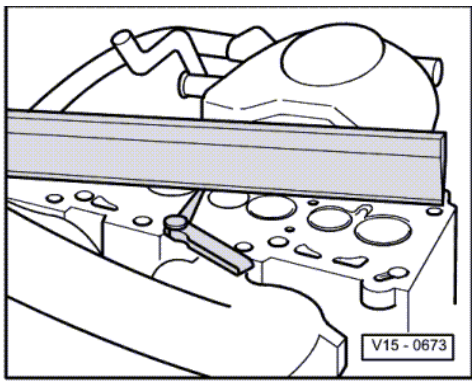

-> Fig. 1 Checking cylinder head for distortion

Max. permissible distortion: 0.1 mm

Note:

Reworking diesel cylinder heads is not permissible.

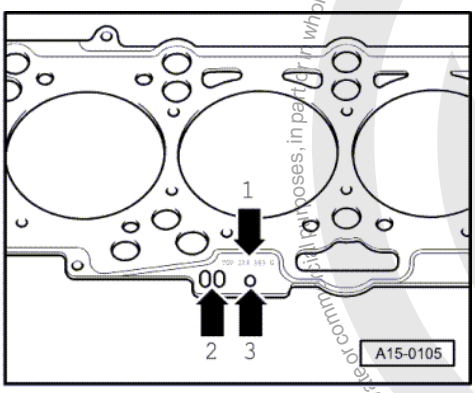

-> Fig.2 Cylinder head gasket identification

- Part No. = Arrow 1
- Control code = Arrow 3 (not relevant!)
- Holes/notches = Arrow 3

Note:

Different thicknesses of cylinder head gasket are fitted depending on the piston projection. When replacing the cylinder head gasket, install a new gasket with the same identification.

1.2 - Removing and installing cylinder head

Special tools, workshop equipment, testers, measuring instruments and auxiliary items required

- Drip tray V.A.G 1306
- V.A.G 1332 Torque wrench (40...200 Nm)
- Guide pins 3070

Notes:

- Always renew cylinder head bolts.

Protected by copyright. Copyright by Volkswagen AG. Volkswagen AG does not guarantee or accept any liability with respect to the correctness of information in this document. Copyright by Volkswagen AG.
satelettronica

- In cases of repair carefully remove gasket remains from cylinder head and cylinder block. Ensure that no long grooves or scratches are created. When using abrasive paper do not use a grade less than 100.

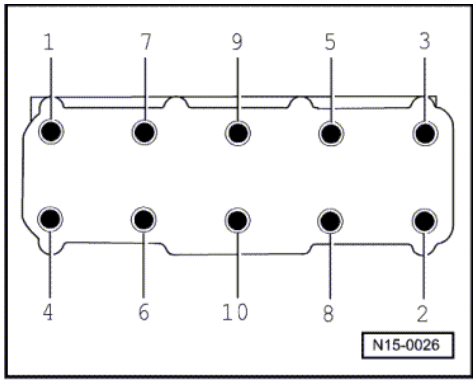

- Carefully remove emery and abrasive remains.
- Remove new cylinder head gasket from packaging, just before installation.
- Handle gasket extremely carefully. Damaging the silicone layer or the indented area will lead to leaks.

Removing

- -> Maintain sequence when loosening and tightening cylinder head bolts.

Installing

- Turn crankshaft to TDC marking before fitting cylinder head.

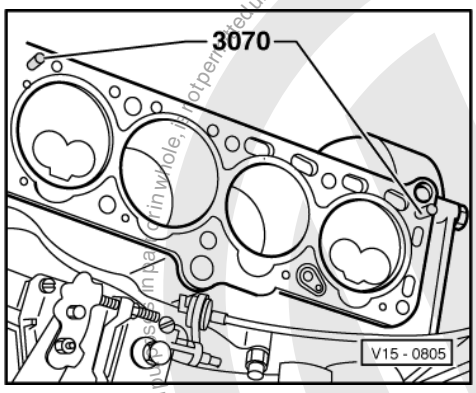

- Turn crankshaft against engine direction of rotation until all pistons are approximately equally placed below TDC.
- Place cylinder head gasket on.
- -> To centralize, screw guide pins from 3070 into the outer threaded holes on the intake side.
- Fit cylinder head, screw in 8 remaining cylinder head bolts and tighten by hand.
- Remove guide pins with removal tool from 3070 and install cylinder head bolts.

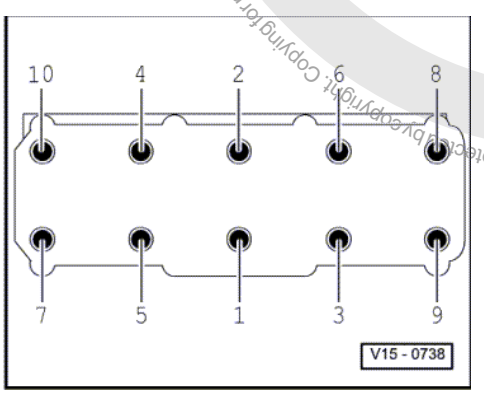

- -> Tighten cylinder head in four stages in sequence shown as follows:
- 1. Tighten initially with torque wrench:
  Stage I = 40 Nm

satelettronica

Stage II = 60 Nm
- 2. Turn further with normal spanner:
  Stage III = 1/4 turn (90 °)
  Stage IV = 1/4 turn (90 °)

Note:

Retightening the cylinder head bolts after repairs is not required.

- After tightening the cylinder head turn camshaft so that the cams for No. 1 cylinder point evenly upwards. Turn crankshaft, in engine D.O.R., To TDC before fitting toothed belt.

1.3 - Checking compressions

Special tools, workshop equipment, testers, measuring instruments and auxiliary items required

- Compression tester V.A.G 1381 or V.A.G 1763

Engine codes AEY, AFN, AHB, AHU, AKW, ALE

- Adapter V.A.G 1381/12
- Jointed spanner 3220
- Torque wrench V.A.G 1331 (5 - 50 Nm)

Engine code 1Y

- Adapter V.A.G 1323/2A
- Ring spanner 3035
- V.A.G 1332 Torque wrench (40...200 Nm)

Test conditions

- Engine oil temperature min. 30 °C.

Test sequence

Engine codes AEY, AFN, AHB, AHU, AKW, ALE

- Pull connector off fuel cut-off valve on injection pump.

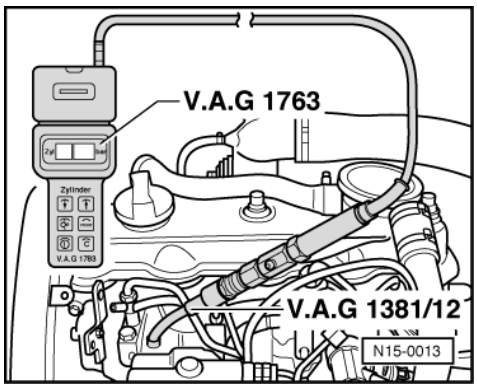

- Separate connector to quantity adjuster on injection pump.
- Remove all glow plugs using socket spanner 3220.
- -> Screw in adapter V.A.G 1381/12 in place of the glow plugs.
- Check compressions with compression tester V.A.G 1381 or V.A.G 1763.

Protected by copyright. Copying for private or commercial purposes, in part or in whole, is not permitted unless authorised by Volkswagen AG. Volkswagen AG does not guarantee or accept any liability with respect to the correctness of information in this document. Copyright by Volkswagen AG.
satelettronica

Note:

Using the compression tester => Operating instructions.

- Operate starter until tester shows no further pressure increase.

Compression pressure:

New: 25...31 bar
Wear limit: 19 bar

Permissible difference between all cylinders: 5 bar

- Install glow plugs with socket and jointed extension 3220
  Tightening torque: 15 Nm.
- Interrogate fault memory:

=> Repair group 01; Fault memory; Interrogating fault memory Fault memory Interrogating fault memory

Note:

Faults will have been stored because the connector to injection pump has been separated. Therefore interrogate and erase fault memory.

Engine code 1Y

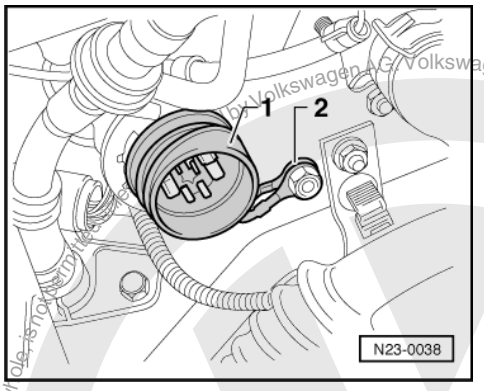

-> Separate multi-pin connector -1-.
- Remove injection pipes with slotted ring spanner 3035.
- Unscrew all injectors and take out heat shields.

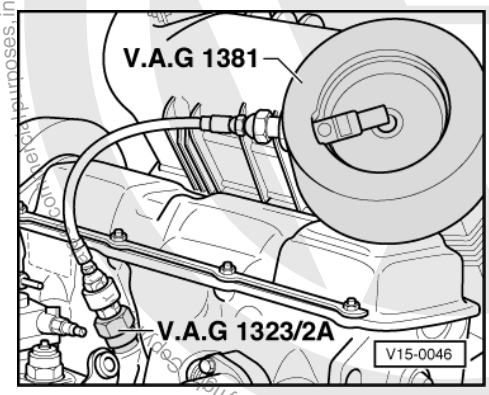

- -> Screw in adapter V.A.G 1323/2A in place of the injectors.
  Insert old heat shield between adapter and cylinder head.
- Screw compression pressure recorder V.A.G 1381 or V.A.G 1763 into the adapter by hand.

satelettronica

Note:

Using the compression tester => Operating instructions.

- Operate starter until tester shows no further pressure increase.

Compression pressure:

New: 34 bar
Wear limit: 26 bar

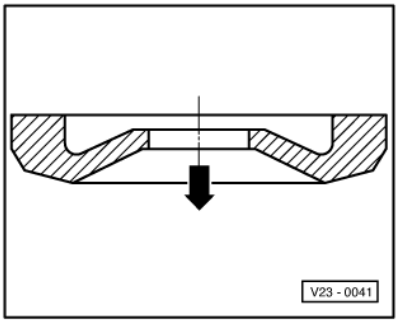

Permissible difference between all cylinders: 5 bar

Note:

Always renew heat shield seals between cylinder head and injectors.

-> Installation position of heat shield:
Arrow points towards cylinder head.

- Tightening torques:
  Injector pipes = 25 Nm
  Injectors = 70 Nm

- Interrogate fault memory:

=> Repair group 01; Self-diagnosis; Interrogating fault memory Self-diagnosis Interrogating fault memory

Note:

Faults will have been stored because the connector to injection pump has been separated. Therefore interrogate and erase fault memory.

Protected by copyright. Copying for private or commercial purposes, in part or in whole, is not permitted unless authorised by Volkswagen AG. Volkswagen AG does not guarantee or accept any liability with respect to the correctness of information in this document. Copyright by Volkswagen AG.
satelettronica

2 - Servicing valve gear

2.1 - Servicing valve gear

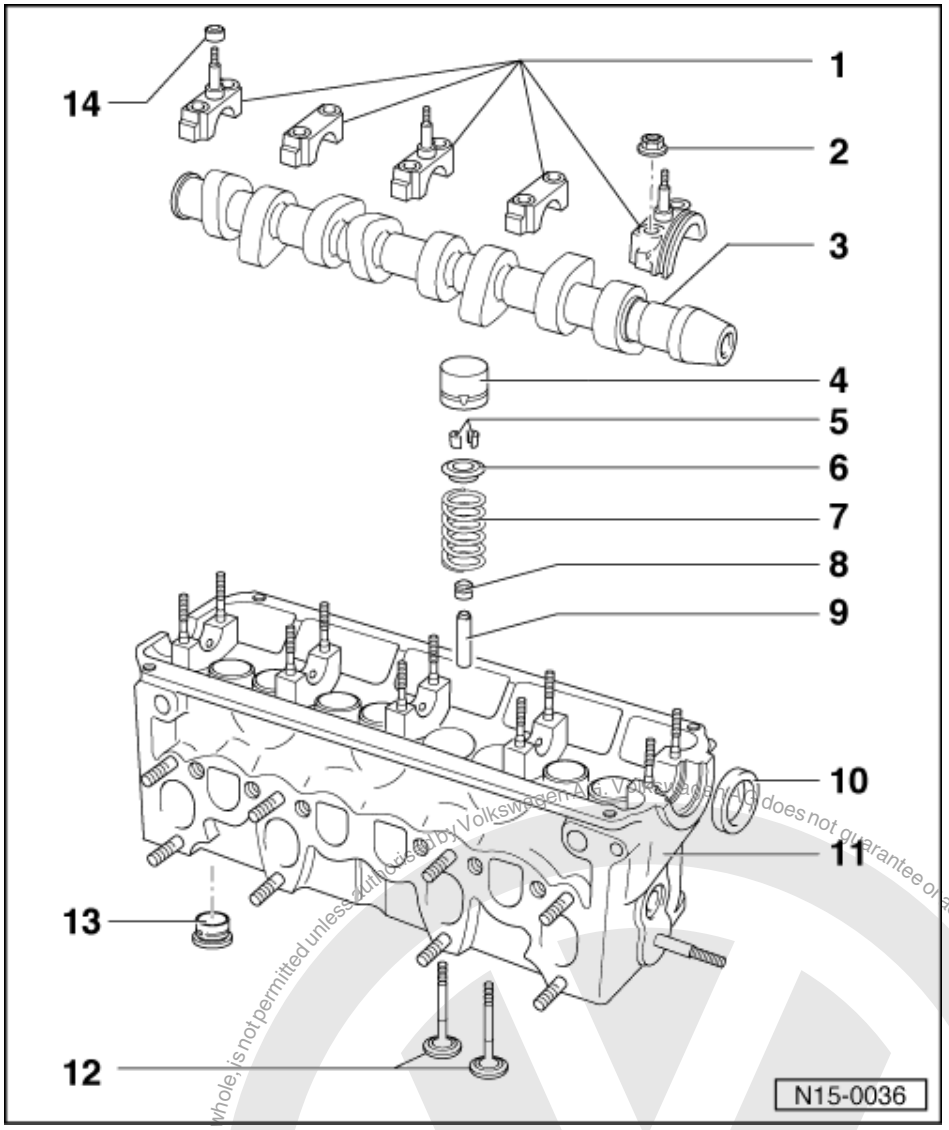

Note:

Cylinder heads with cracks between the valve seats may be used without reducing engine life, provided the cracks are small and not more than 0.5 mm wide.

1 Bearing cap
- Installation position => Fig. 2
- Installation sequence
  => Page 75 ; removing and installing camshaft

2 20 Nm

Protected by copyright. Copying for private or commercial purposes, in part or in whole, is not permitted unless authorised by Volkswagen AG. Volkswagen AG does not guarantee or accept any liability with respect to the correctness of information in this document. Copyright by Volkswagen AG.
satelettronica

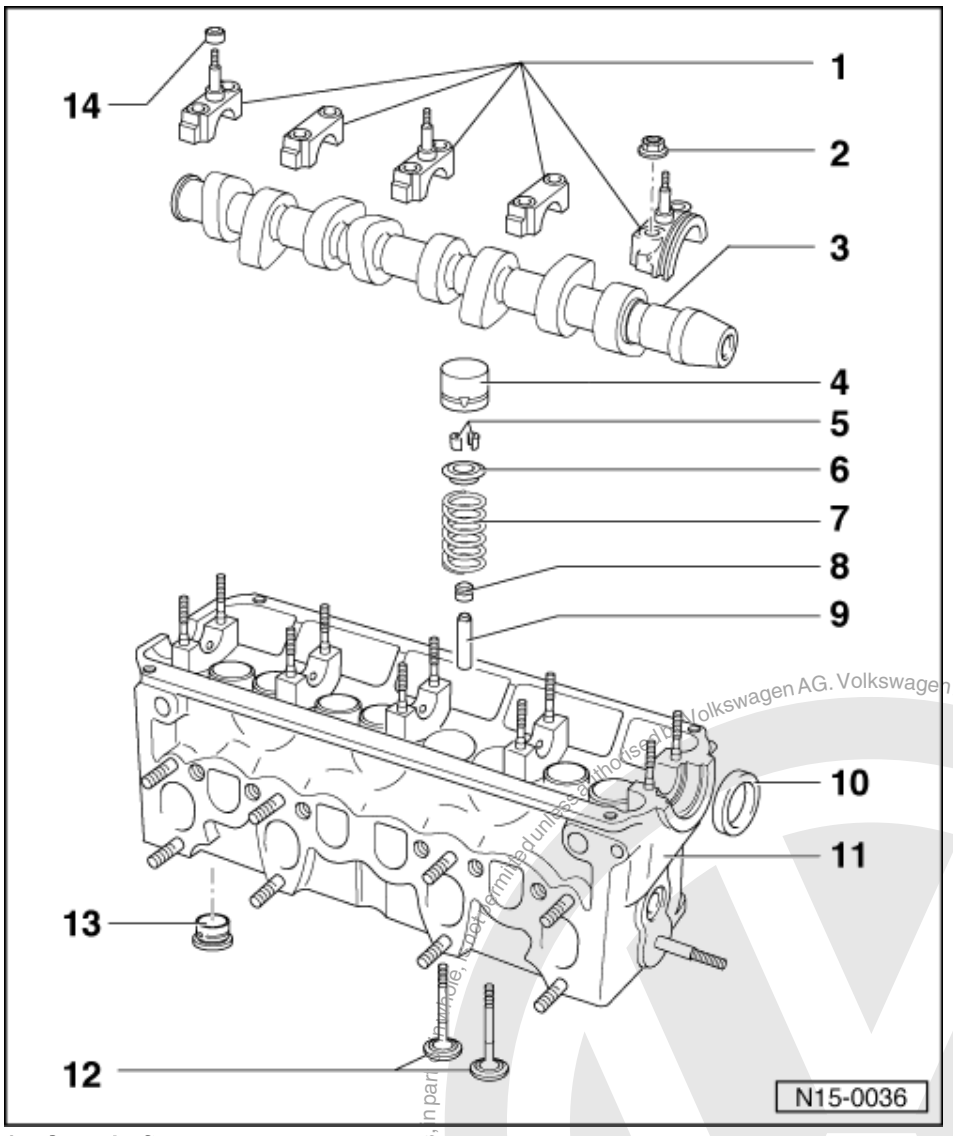

3 Camshaft

- Checking axial clearance => Fig. 1
- Removing and installing => Page 75
- Checking radial clearance with plastigage
  Wear limit: 0.11 mm
- Run-out: max. 0.01 mm
- Identification and valve timing => Fig. 4

4 Bucket tappet

- Do not interchange
- With hydraulic valve clearance compensation
- Checking => Page 77
- Store with cam lobe contact surface downwards
- Before installing check camshaft axial clearance => Fig. 1
- Oil contact surface

Protected by copyright. Copying for private or commercial purposes, in part or in whole, is not permitted unless authorised by Volkswagen AG. Volkswagen AG does not guarantee or accept any liability with respect to the correctness of information in this document. Copyright by Volkswagen AG.
satelettronica

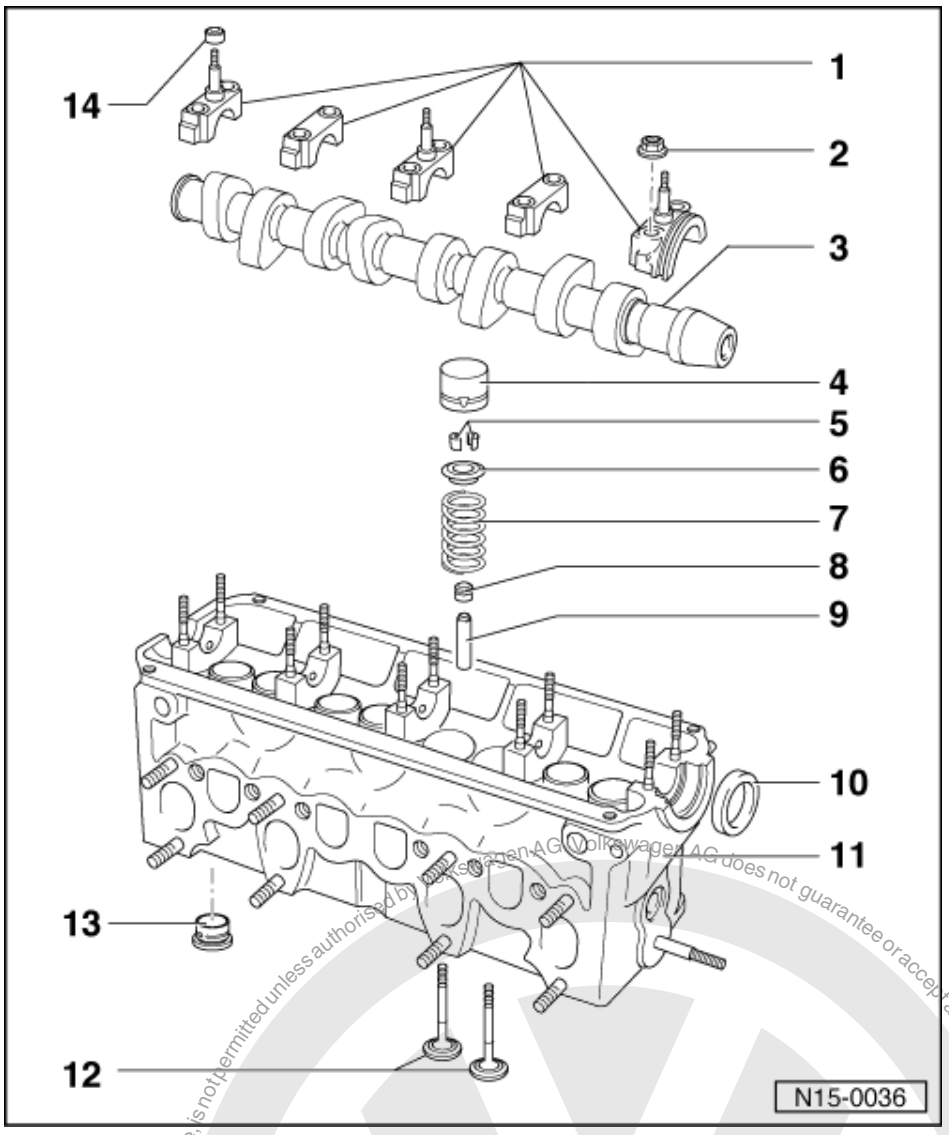

5 Cotters
6 Upper valve spring plate
7 Valve spring
- Removing and installing:
  Cylinder head
  removed: with 2037
  installed: => Page 74 , renewing valve stem seals

8 Valve stem seal
- Renewing=> Page 74

9 Valve guide
- Checking => Page 73
- Renewing => Page 74
- Service version with collar

10 Oil seal
- To remove and install, remove bearing cap
- Removing and installing toothed belt =>Page 29

satelettronica
Protected by copyright. Copying for private or commercial purposes, in any form and by any means, is not permitted unless authorised by Volkswagen AG. Volkswagen AG does not guarantee or accept any liability with respect to the correctness of information in this document. Copyright by Volkswagen AG.

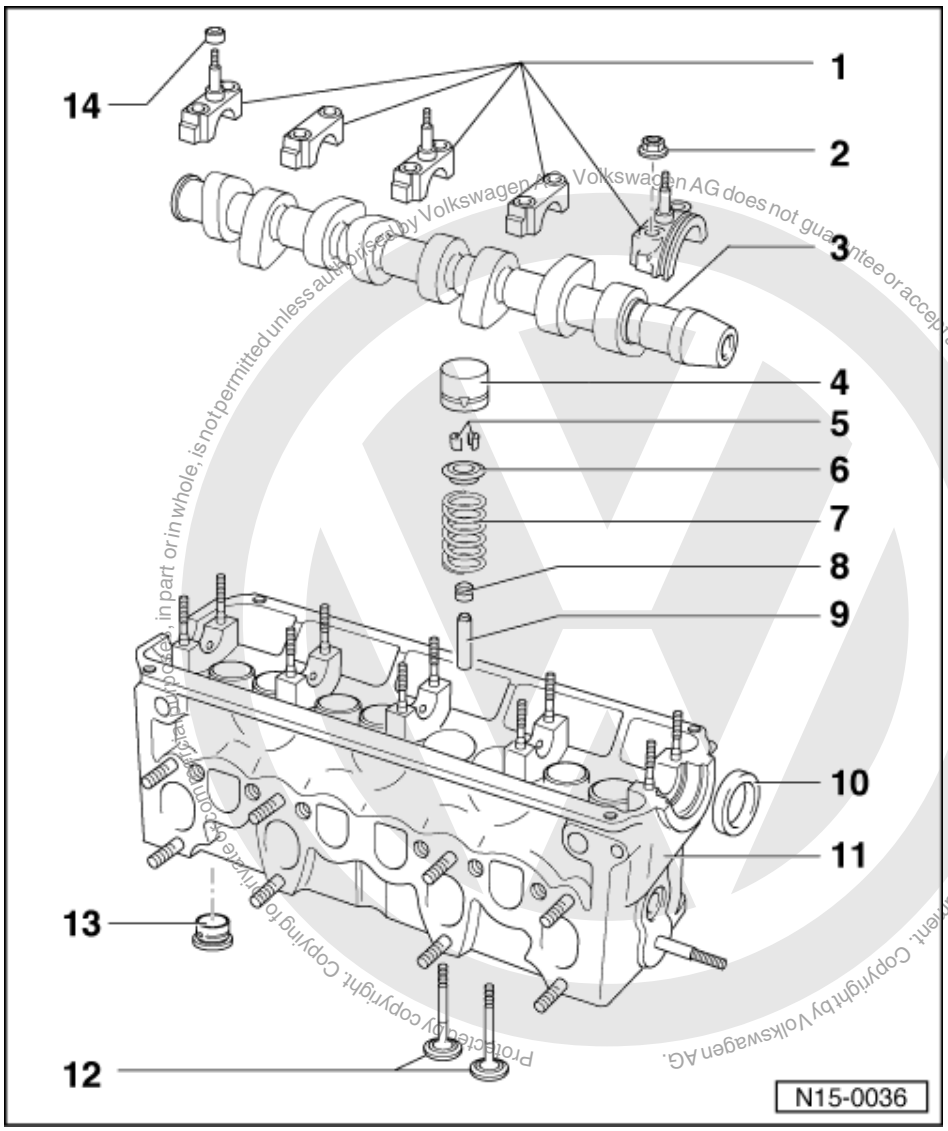

Protected by copyright. Copying for private or commercial purposes, in part or in whole, is not permitted unless authorised by Volkswagen AG. Volkswagen AG does not guarantee or accept any liability with respect to the correctness of information in this document. Copyright by Volkswagen AG.

11 Cylinder head

- See note
  => Page 65
- Reworking valve seats
  => Page 71

12 Valves

- Valve dimensions => Fig. 3

13 Swirl chamber

- Engine code 1Y
- Renew if damaged
- Renewing => Page 77

14 Lower sealing cone

satelettronica

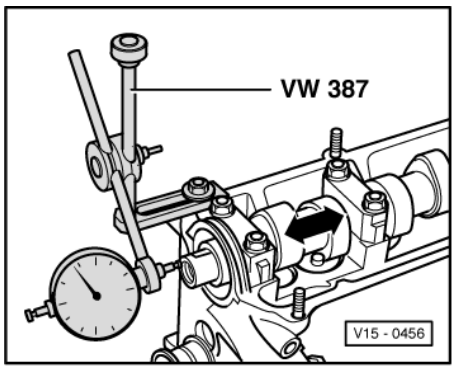

-> Fig. 1 Checking camshaft axial clearance

Special tools, workshop equipment, testers, measuring instruments and auxiliary items required

- Universal dial gauge bracket VW 387
- Dial gauge

Wear limit: max. 0.15 mm

Check with bucket tappets removed and with first and last bearing caps fitted.

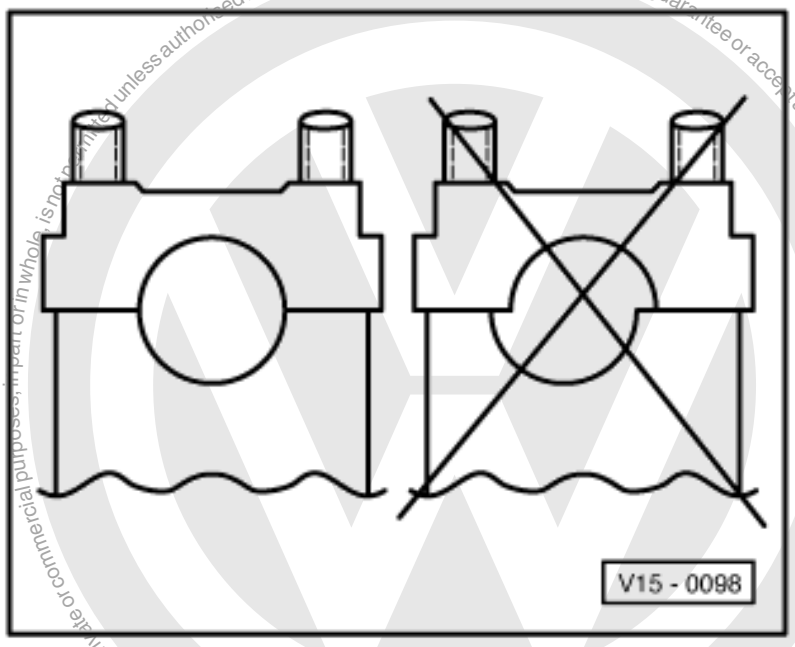

-> Fig. 2 Fitting position of camshaft bearing caps

Note offset. Before installing camshaft fit bearing caps and determine fitting position.

satelettronica

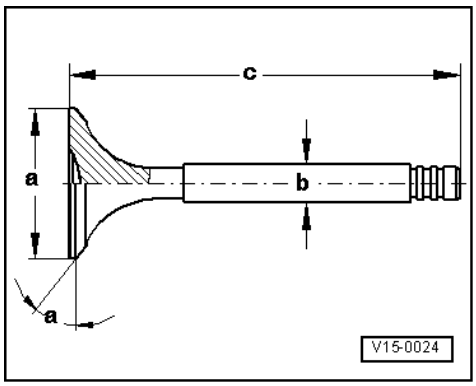

-> Fig. 3 Valve dimensions

Note:

Valves must not be reworked. Only lapping-in is permitted.

Engine codes AEY, AFN, AHB, AHU, AKW, ALE

Dimension	Inlet valve	Exhaust valve
øa mm	35.95	31.45
øb mm	AEY, AHB, AKW: 6.97 AFN, AHU, ALE: 6.963	AEY, AHB, AKW: 6.95 AFN, AHU, ALE: 6.943
c mm	AEY, AHB, AKW: 96.35 AFN, AHU, ALE: 96.85	AEY, AHB, AKW: 96.35 AFN, AHU, ALE: 96.85
α <°	45	45

Engine code 1Y

Dimension	Inlet valve	Exhaust valve
øa mm	36.0	31.0
øb mm	6.97	6.95
c mm	95.0	95.0
α <°	45	45

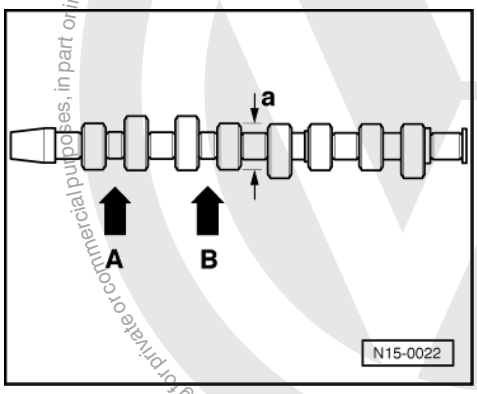

Protected by copyright. Copying for private or commercial purposes, in part or in whole, is not permitted unless authorised by Volkswagen AG. Volkswagen AG does not guarantee or accept any liability with respect to the correctness of information in this document. Copyright by Volkswagen AG.
satelettronica

-> Fig.4 Camshaft identification, valve timing

Identification

- Cam base diameter: a = 38 mm ø
- Identification by stamped numbers and letters between inlet and exhaust cams:

Engine codes	AHU	AEY, AHB	AKW	ALE, AFN	1Y
No. 1 Cyl. -arrow A-	W	W	28 E	28 J	W
No. 2 Cyl. -arrow B-	028 F	028 E	DE	DE	028 D

Engine codes	AHU, ALE, AFN	AEY, AHB, AKW	1Y
Inlet opens ATDC	16 °	11 °	6 °
Inlet closes ABDC	25 °	25 °	20 °

Exhaust opens BBDC	28 °	40 °	25.5 °
Exhaust closes BTDC	19 °	10 °	6.5 °

2.2 - Reworking valve seats

Special tools, workshop equipment, testers, measuring instruments and auxiliary items required

- Depth gauge
- Valve seat refacing tool

Notes:

- When repairing engines with leaking valves, it is not always sufficient to reface or renew valve seats and valves. It is also necessary to check the valve guides for wear. This is particularly important on high mileage engines.
- The valve seats should only be reworked just enough to produce a perfect seating pattern. The maximum permissible reworking dimension must be calculated before work is carried out. If the reworking dimension is exceeded, the function of the hydraulic tappets can no longer be guaranteed and therefore the cylinder head should be renewed.

Calculating max. permissible reworking dimension

- Insert valve and press firmly against seat.

Note:

If the valve is to be renewed as part of a repair, use a new valve for the calculation.

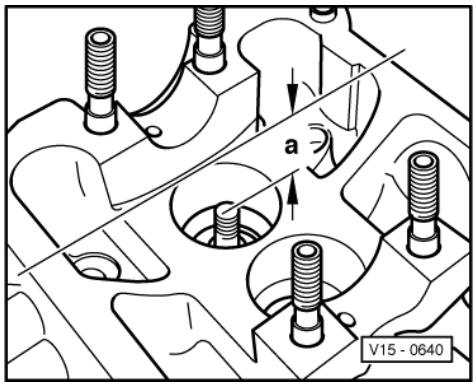

Copyright by Volkswagen AG. Volkswagen AG does not guarantee or accept any liability with respect to the correctness of information in this document. Copyright by Volkswagen AG. Copying for private or commercial purposes, in part or in whole, is not permitted unless authorised by Volkswagen AG.
satelettronica

- -> Measure distance -a- between end of valve stem and upper edge of cylinder head.
- Calculate max. permissible reworking dimension from measured distance -a- and minimum dimension.

Minimum dimension:
Inlet valve 35.8 mm
Exhaust valve 36.1 mm

Measured distance minus minimum dimension
= max. permissible reworking dimension.

Example:

-	Measured distance	36.5	mm
	Minimum dimension	35.8	mm
=	max. perm. rework dimension	0.7	mm

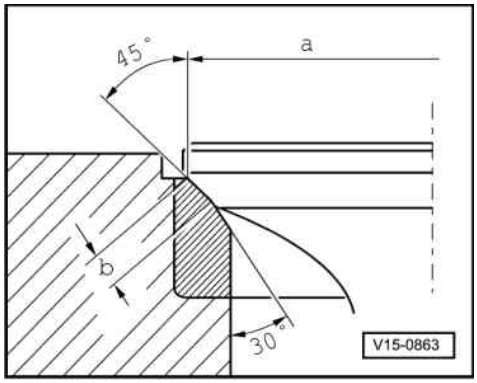

Engine codes AEY, AFN, AHB, AHU, AKW, ALE

-> Reworking inlet valve seat

a	= 35.7 mm ø
b	= 1.6 mm
45 °	= Valve seat angle

Note:

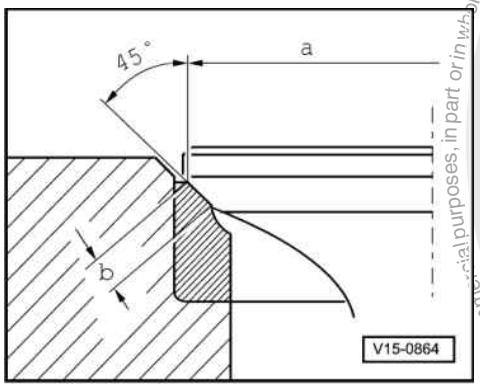

The 30 ° lower valve seat chamfer is necessary to ensure that the inlet channel flow characteristics are maintained.

-> Reworking exhaust valve seat

a	= 31.4 mm ø
b	= 2.7 mm
45 °	= Valve seat angle

Protected by copyright. Copying for private or commercial purposes, in part or in whole, is not permitted unless authorised by Volkswagen AG. Volkswagen AG does not guarantee or accept any liability with respect to the correctness of information in this document. Copyright by Volkswagen AG.
satelettronica

Engine code 1Y

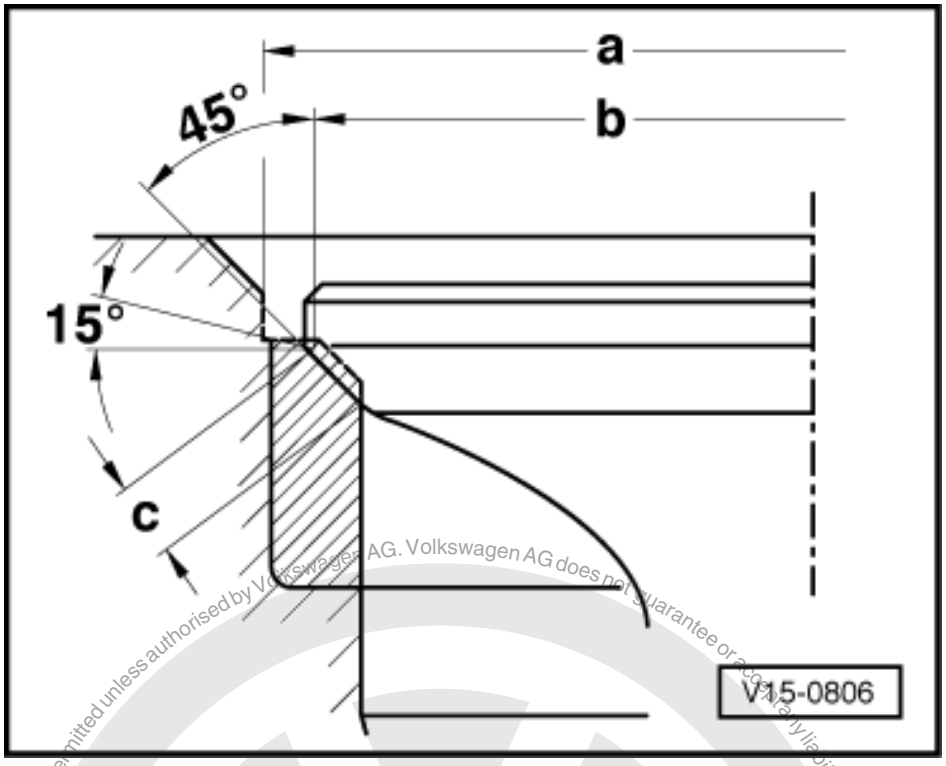

-> Reworking valve seats

Dimen.		In. valve seats	Ex. valve seats
øa	mm	37.201)	33.201)
øb	mm	34.80	30.40
c	mm	2.70	2.05
45°		Valve seat angle	
30°		Correction angle	

1) max. external diameter of correction cutter

2.3 - Checking valve guides

Special tools, workshop equipment, testers, measuring instruments and auxiliary items required

- VW 387 Universal dial gauge bracket
- Dial gauge

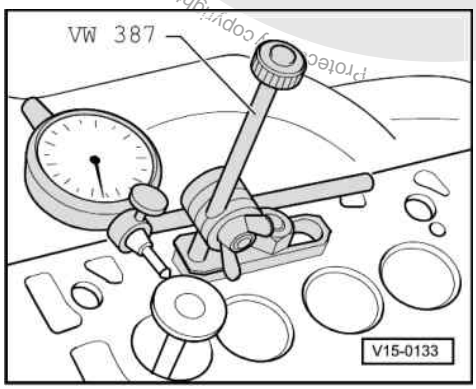

satelettronica

Test sequence

- -> Insert new valve into guide until end of valve stem is flush with end of guide. Due to the slight difference in stem dimensions, ensure that only an inlet valve is used in the inlet guide and an exhaust valve in the exhaust guide.
- Rock: Max. 1.3mm

2.4 - Renewing valve guides

Special tools, workshop equipment, testers, measuring instruments and auxiliary items required

- Drift 3121
- Hand reamer 3120 and cutting fluid

Removing

- Clean and check cylinder head. Cylinder heads in which the valve seats can no longer be reworked, or cylinder heads which have already been machined to the minimum dimension, should not have the valve guides replaced.
- Press out worn valve guides with drift 3121 from camshaft side (valve guides with shoulder - repair version - from the combustion chamber side).

Installing

- Moisten new guides with oil and press in with drift 3121 from the camshaft side (cylinder head cold) until shoulder makes contact.

Note:

When the shoulder on guide makes contact, the pressure must not exceed 1.0 t otherwise shoulder may break off.

- Ream guides out with hand reamer 3120 using plenty of cutting fluid.
- Rework valve seats => Page 71 .

2.5 - Renewing valve stem seals

(with cylinder head fitted)

Special tools, workshop equipment, testers, measuring instruments and auxiliary items required

- Puller 3047A
- Assembly tool 2036
- Lever VW 541/1A with press piece VW 541/5
- Fitting tool 3129

Removing

- Remove camshaft => Page 75 .
- Remove bucket tappets (do not interchange) and store with the contact surface downwards.
- Set piston of respective cylinder to top dead centre (TDC).

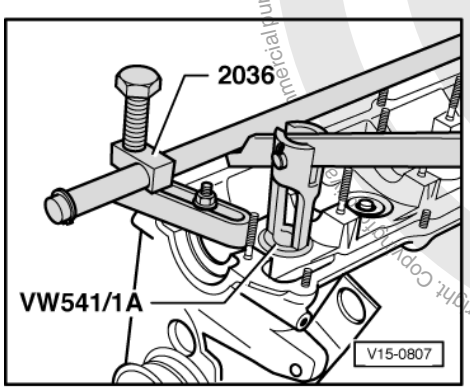

Protected by copyright. Copyright by Volkswagen AG.
Commercial purposes, in part or in whole, is not permitted unless authorised by Volkswagen AG. Volkswagen AG does not guarantee or accept any liability with respect to the correctness of information in this document.
satelettronica

- -> Fit assembly tool 2036 and adjust mountings to height of studs.
- Remove valve springs with lever VW 541/1A and press piece VW 541/5.

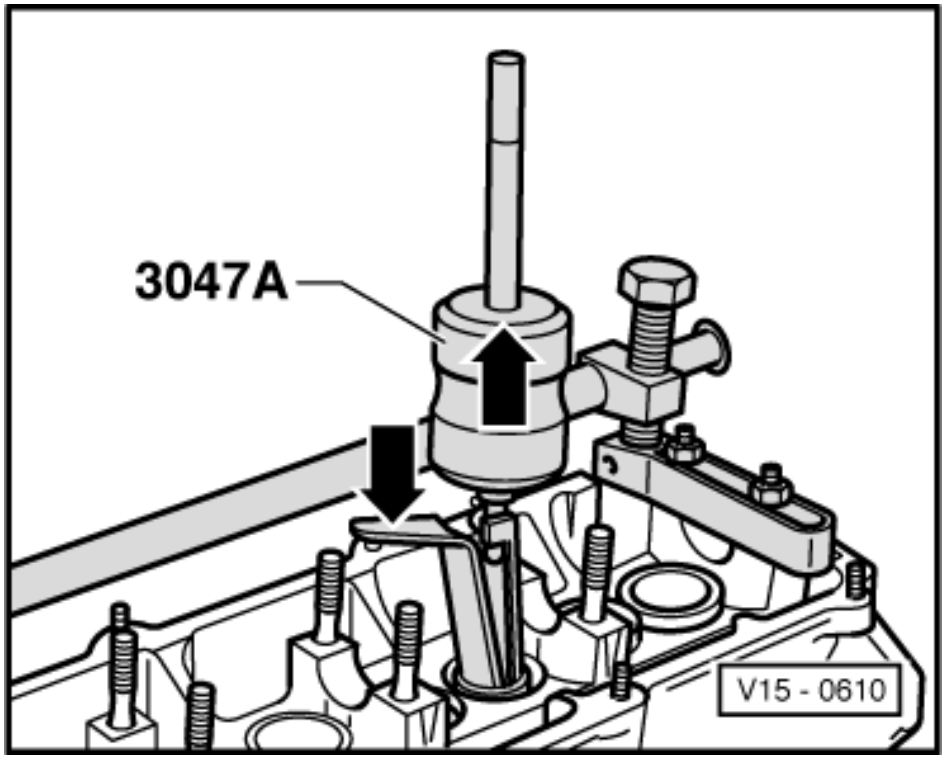

Note:

The valves are supported by the piston crown.

- -> Pull off valve stem seals with puller 3047A.

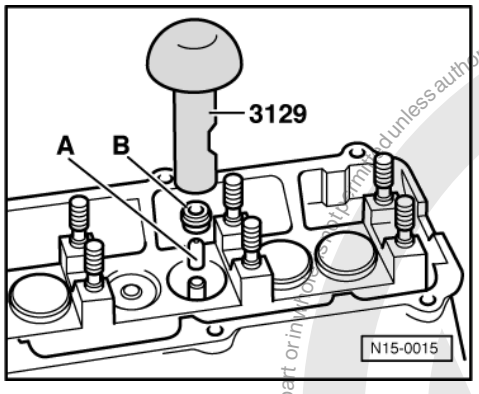

Installing

- -> To prevent damage to the new valve stem seals, place plastic sleeve -A- on valve shaft.
- Oil valve stem seal -B-, place it in the tool 3129 and push carefully onto the valve guide.

2.6 - Removing and installing camshaft

Special tools, workshop equipment, testers, measuring instruments and auxiliary items required

- Setting bar 2065 A
- Counter-hold tool 3036

Protected by copyright. Copying for private or commercial purposes, in part or in whole, is not permitted unless authorised by Volkswagen AG. Volkswagen AG does not guarantee or accept any liability with respect to the correctness of information in this document. Copyright by Volkswagen AG.
satelettronica

- Pin wrench Matra V159
- Drift 2064 (for single part injection pump sprocket)
- Pin 3359 (for two part injection pump sprocket)
- V.A.G 1331 Torque wrench (5...50 Nm)

Removing

- Remove toothed belt and camshaft sprocket => Page 29 .

Note:

It is not necessary to remove ribbed belt, vibration damper/belt pulley and lower toothed belt guard.

- First remove bearing caps 5, 1 and 3. Then loosen bearing caps 2 and 4 alternately and diagonally.

Installing

Notes:

- When installing the camshaft No. 1 cylinder cams must point upwards.

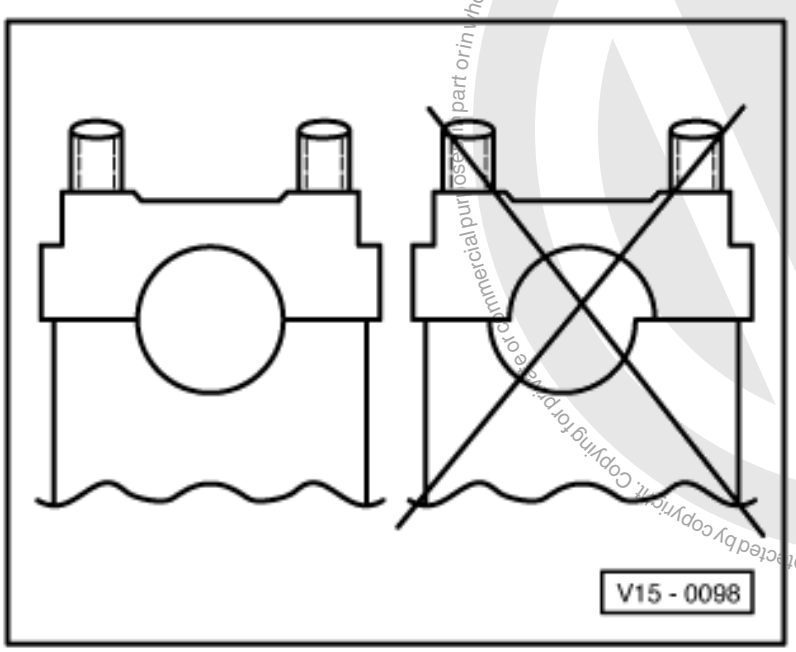

- -> When installing the bearing cap note offset, before installing camshaft fit bearing caps and determine fitting position.

- Oil camshaft running surfaces.
- Tighten bearing caps 2 and 4 alternately and diagonally to
  20 Nm.
- Install bearing caps 5, 1 and 3 and also tighten to
  20 Nm.
- Locate bearing cap 5 by tapping lightly on the end of the camshaft.
- Install camshaft sprocket together with toothed belt and tension toothed belt => Page 29 .

Protected by copyright. Copying for private or commercial purposes, in part or in whole, is not permitted unless authorised by Volkswagen AG. Volkswagen AG does not guarantee or accept any liability with respect to the correctness of information in this document. Copyright by Volkswagen AG.
satelettronica

Note:

When new tappets have been installed the engine must not be started for about 30 minutes. Hydraulic compensation elements must settle (otherwise valves will strike pistons).

2.7 - Checking hydraulic bucket tappets

Special tools, workshop equipment, testers, measuring instruments and auxiliary items required

- Feeler gauge
- Wood or plastic wedge

Notes:

- Renew defective tappet complete (cannot be adjusted or repaired).
- Irregular valve noises when starting engine are normal.

Test sequence

- Start engine and run until the radiator fan has switched on once.

- Increase engine speed to about 2500 rpm for 2 minutes.

If the hydraulic tappets are still noisy, locate defective tappets as follows:

Remove cylinder head cover.
- Rotate crankshaft clockwise, until cam of the tappet to be checked is pointing upwards.
- Determine play between cam and bucket tappet.
- If the play is in excess of 0.1 mm, renew bucket tappet. If the play is less than 0.1 mm or no play, proceed with check as follows:

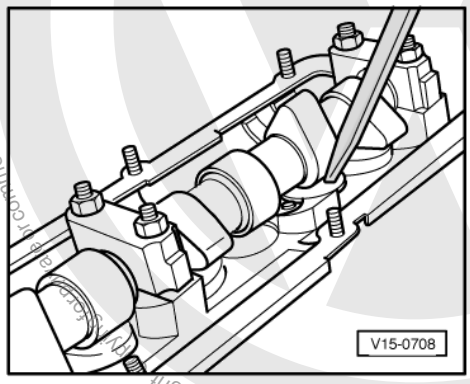

- -> Press tappet down with a wooden or plastic wedge. If free travel in excess of 1 mm is felt before tappet contacts valve, renew tappet.

Note:

After installing new tappets the engine must not be started for approx. 30 minutes. Hydraulic compensation elements must settle (otherwise valves will strike pistons).

2.8 - Replacing swirl chambers

(Engine code 1Y,)

Protected by copyright. Copyright by Volkswagen AG. Volkswagen AG does not guarantee or accept any liability with respect to the correctness of information in this document. Copying for commercial purposes, in part or in whole, is not permitted unless authorised by Volkswagen AG.
satelettronica

Special tools, workshop equipment, testers, measuring instruments and auxiliary items required

- VW 382/7
- VW 385/17

Work sequence

- Cylinder head removed

- Remove all injectors

=> Repair group 23; Servicing fuel injection; Removing and installing injectors. Servicing fuel injection Removing and installing injectors.

- Remove glow plugs.
- Drive swirl chamber out using a suitable drift through injector opening.
- Clean off combustion residue from swirl chamber contact surfaces in cylinder head.
- Fit new swirl chamber in position, installation position is determined by guide lug and groove.
- Drive swirl chamber in using a synthetic head hammer.

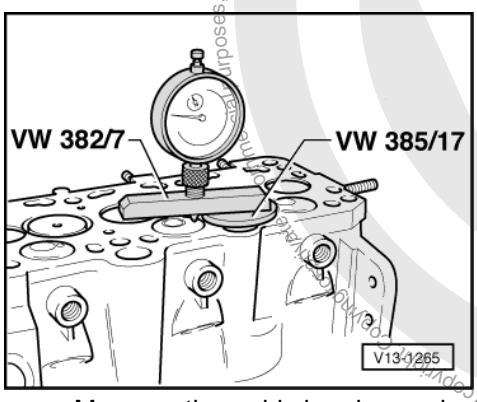

- -> Measure the swirl chamber projection.
  Specification: max. 0.07 mm

If the specification is exceeded:

- Replace cylinder head.

Protected by copyright. Copyright by Volkswagen AG. Volkswagen AG does not guarantee or accept any liability with respect to the correctness of information in this document. Copyright by Volkswagen AG. Reproduction, in any form or medium, is not permitted unless authorised by Volkswagen AG.
satelettronica

17 - Lubrication

1 - Removing and installing parts of the lubrication system

1.1 - Removing and installing parts of the lubrication system

Notes:

- If large quantities of metal particles or other deposits (caused, for example, by partial seizure of the crankshaft or conrod bearings) are found in the engine oil when performing repairs, clean the oil passages thoroughly and renew the oil cooler in order to prevent further damage from occurring later.
- The oil level must not be above the max. mark - danger of damage to catalyst!

Checking oil pressure => Page 89

Oil system capacity1):

with oil filter 4.3 ltr.

1) Up-to-date figures:

=> Exhaust emissions test binder

Engine oil specifications:

Turbo Diesel:
Only use engine oil conforming to VW standard 50500.

Naturally aspirated Diesel:
Only use engine oil conforming to VW standard 50000, 50101, 502001) or 50500 or multi-grade oil to API-CD.

1) Only in conjunction with VW standard 50500

Protected by copyright. Copyright by Volkswagen AG. Volkswagen AG does not guarantee or assume any liability with respect to the correctness of information in this document. Copyright by Volkswagen AG. Unauthorised use for commercial purposes, in part or in whole, is not permitted.
satelettronica

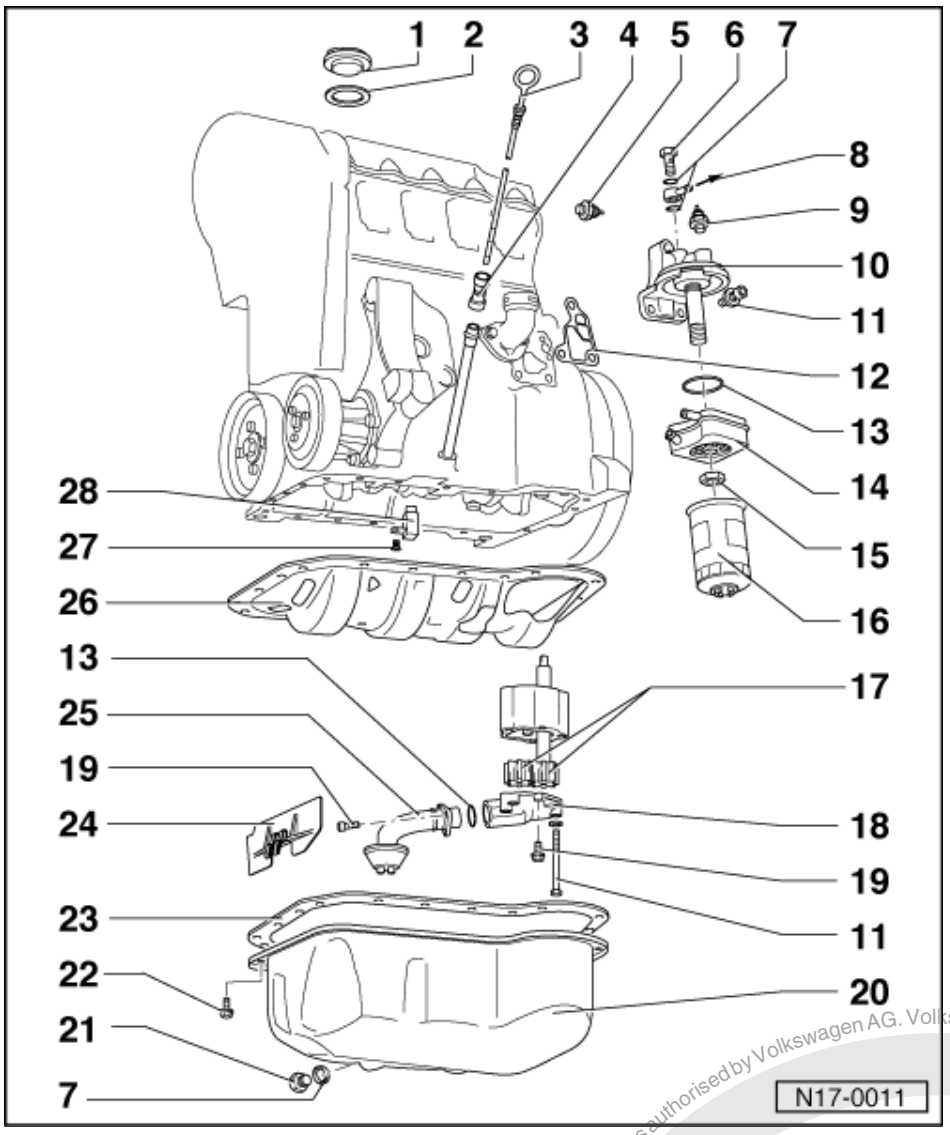

Part I

Part II removing and installing oil supply pipe => page 86

1 Cap
2 Gasket
- Renew if damaged

3 Dipstick
- The oil level must not be above the max. mark!
- Area above shaded zone up to max. mark: Do not top up with engine oil!
- Oil level in shaded zone: Engine oil can be topped up
- Area min. mark up to shaded zone: Top-up engine oil

4 Guide
- Pull off to extract oil

Protected by copyright. Copying for private or commercial purposes, in part or in whole, is not permitted unless authorised by Volkswagen AG. Volkswagen AG does not guarantee or accept any liability with respect to the correctness of information in this document. Copyright by Volkswagen AG.
satelettronica

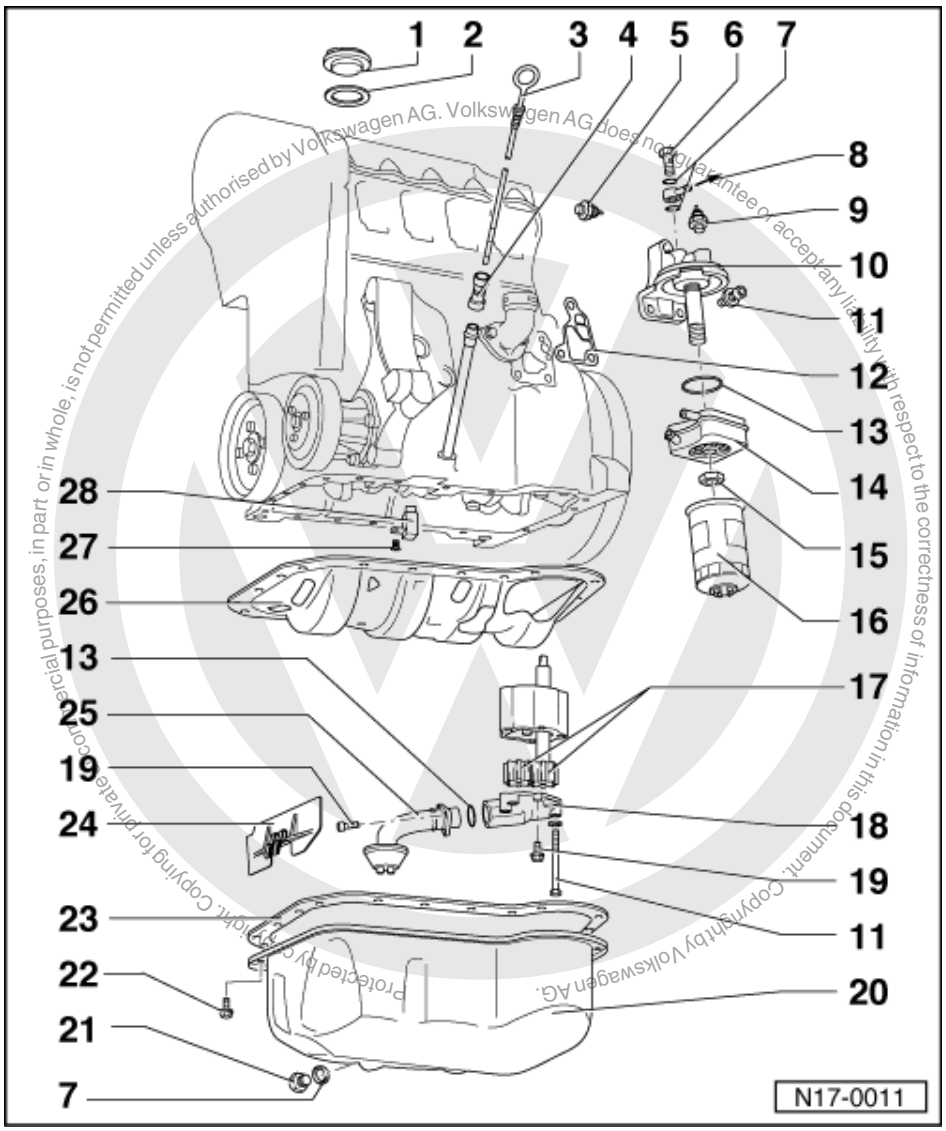

5 0.25 bar oil pressure switch (F22), 25Nm
- Blue
- Checking => Page 89
- If sealing ring is leaking nip open and replace.

6 Banjo bolt
- Tightening torque => page 86 , item 4

7 Seal
- Renew

8 To turbocharger
- Only engine codes AFN, AHU, ALE

9 0.9 bar oil pressure switch (F1), 25 Nm
- Grey
- Wiring: yellow
- Checking => Page 89
- If sealing ring is leaking nip open and replace.

satelettronica

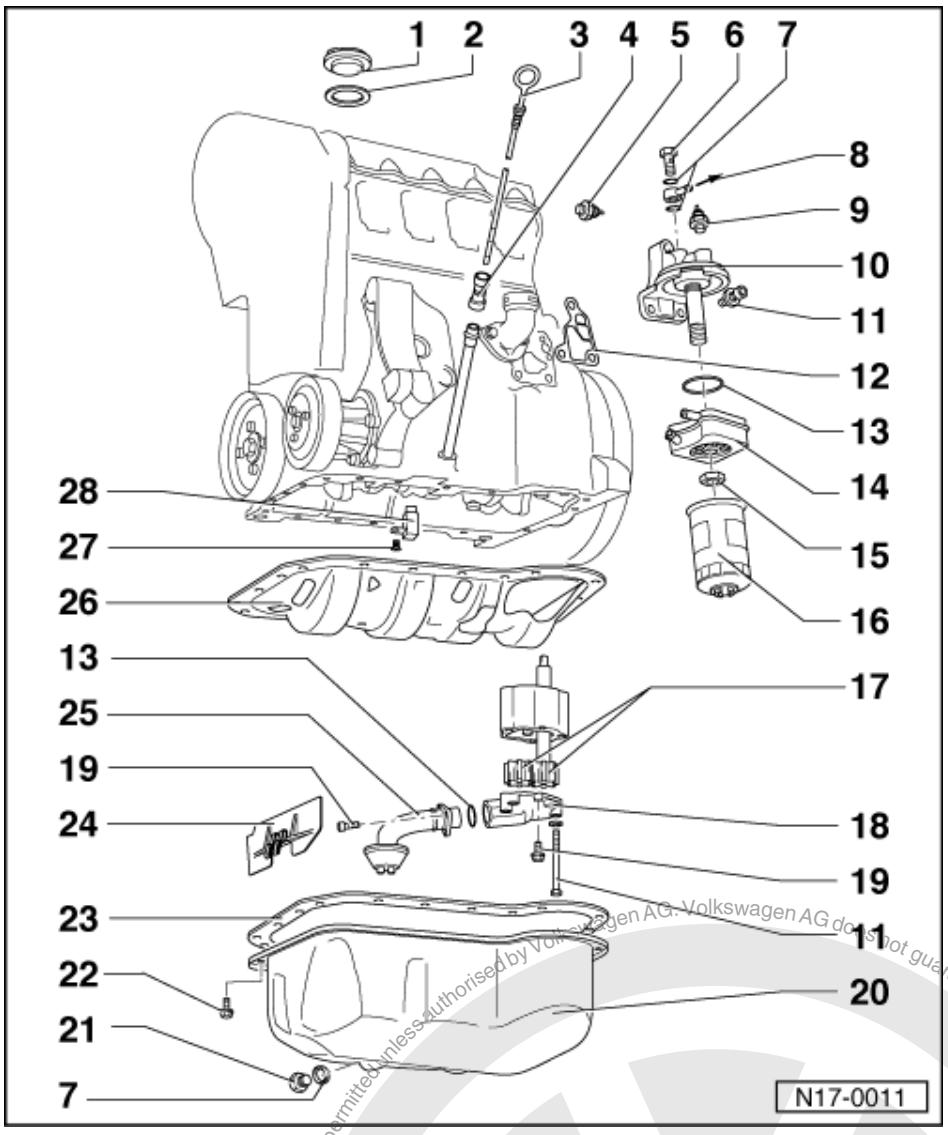

10 Oil filter bracket

11 25 Nm

12 Gasket

- Renew

13 O-ring

- Renew

14 Oil cooler

- Coat contact area to flange, outside the seal, with AMV 188 100 02
- Ensure clearance to adjacent components
- See note
  => Page 79

15 25 Nm

16 Oil filter

- Loosen with strap wrench
- Tighten by hand
- Observe installation instructions on oil filter

Protected by copyright. Copying for private or commercial purposes, in part or in whole, is not permitted unless authorised by Volkswagen AG. Volkswagen AG does not guarantee or accept any liability with respect to the correctness of information in this document. Copyright by Volkswagen AG.
satelettronica

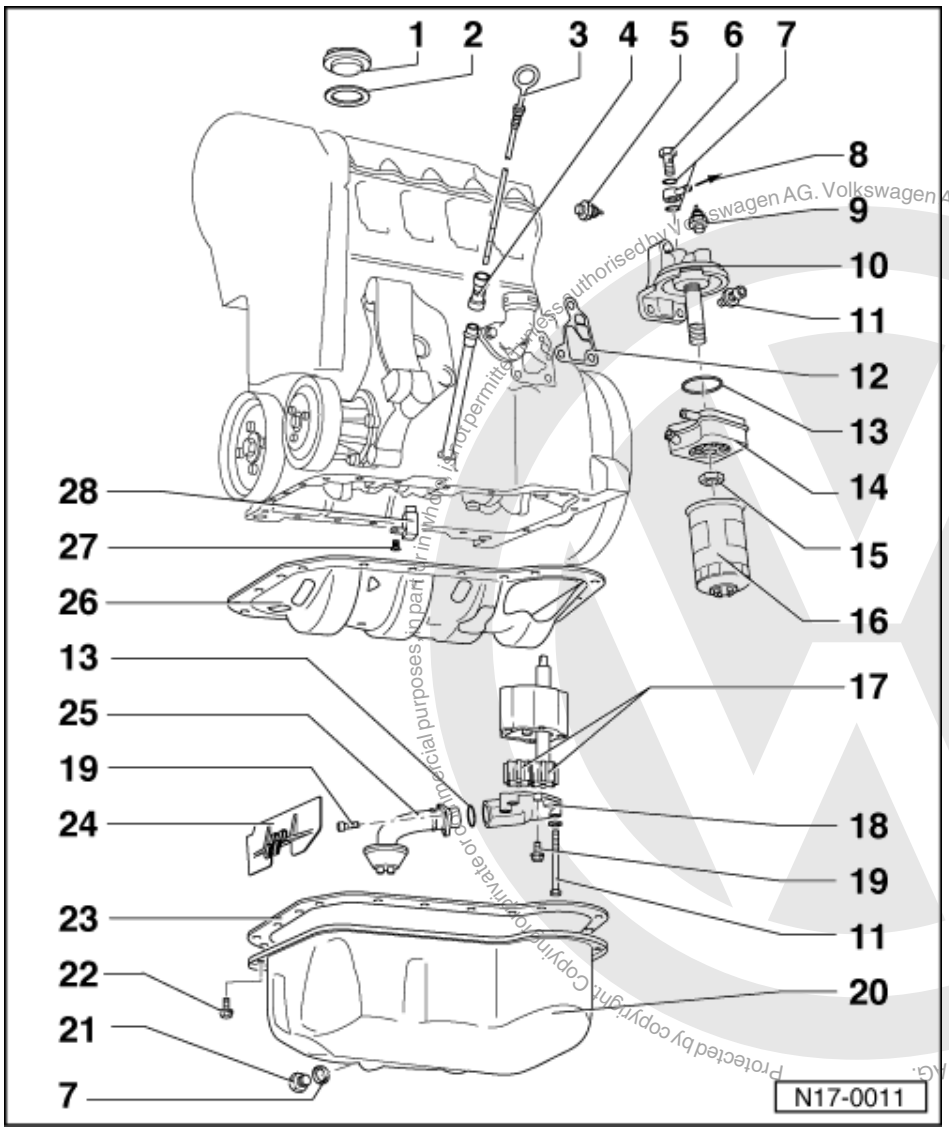

17 Gears

- Checking backlash
  => Fig. 1
- Checking axial clearance
  => Fig. 2

18 Oil pump cover with pressure relief valve

- Opening pressure: 5.7...6.7 bar

19 10 Nm

20 Sump

- Clean sealing surface before installing
- Engine codes AEY, AHB for oil sump cap
- Removing and installing oil sump cover =>Page 90

21 Oil drain plug, 30 Nm

- Renew plug with attached seal

22 20 Nm

- Remove and install both rear bolts gearbox end with jointed spanner 3185

Protected by copyright. Copying for private or commercial purposes, in part or in whole, is not permitted unless authorised by Volkswagen AG. Volkswagen AG does not guarantee or accept any liability with respect to the correctness of information in this document. Copyright by Volkswagen AG.
satelettronica

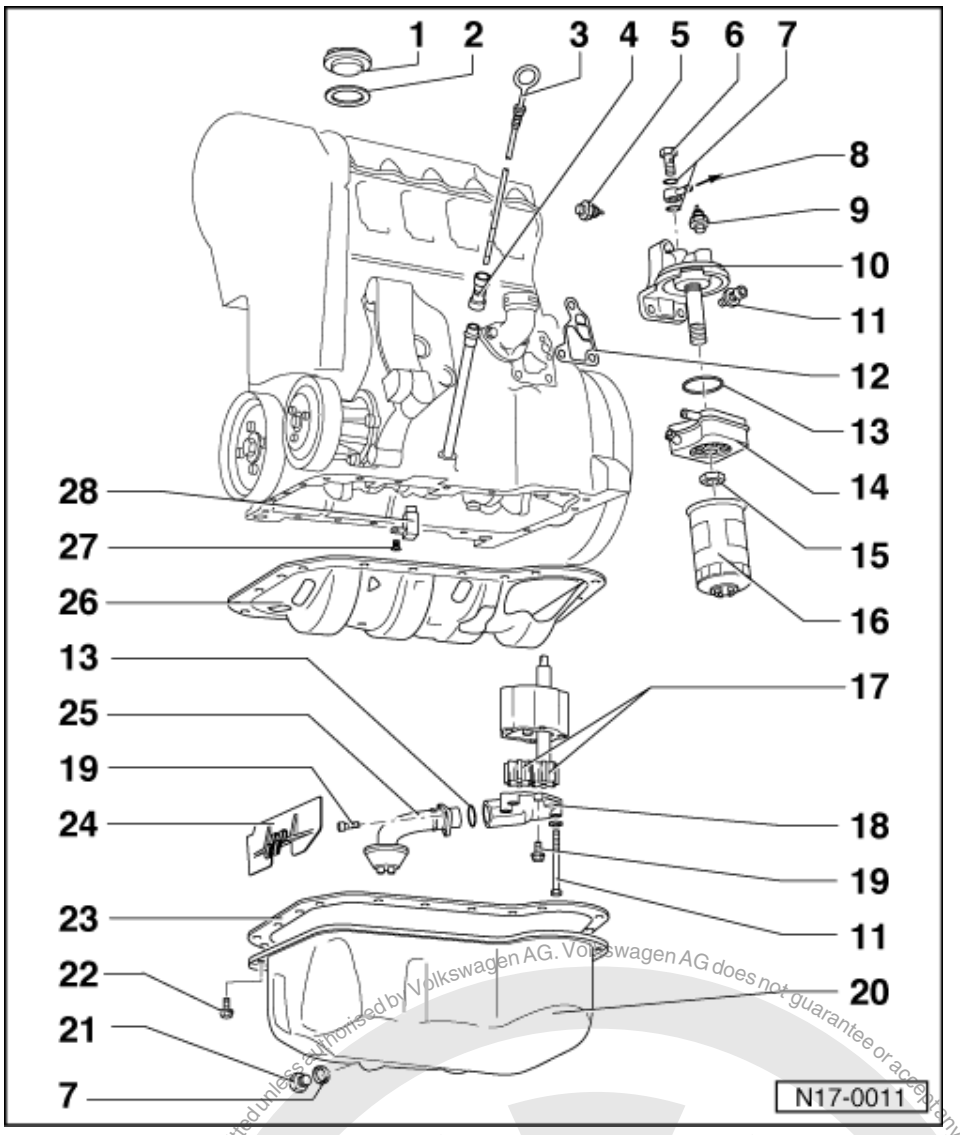

23 Gasket
- Only engine codes AEY, AFN, AHB, AHU, AKW, ALE
- Renew
- Before fitting gasket coat sump flange/cylinder block flange with "D2"

24 Baffle plate

25 Suction pipe
- Clean strainer if soiled

26 Baffle plate
- Engine code1Y
- With gasket
- Renew gasket if damaged

27 10 Nm
- Insert with AMV 188 100 02

28 Oil spray jet
- For piston cooling

Protected by copyright. Copying for private or commercial purposes, in any form or medium without permission of Volkswagen AG. Copyright by Volkswagen AG.
Volkswagen AG does not guarantee or accept any liability with respect to the correctness of information in this document.
satelettronica

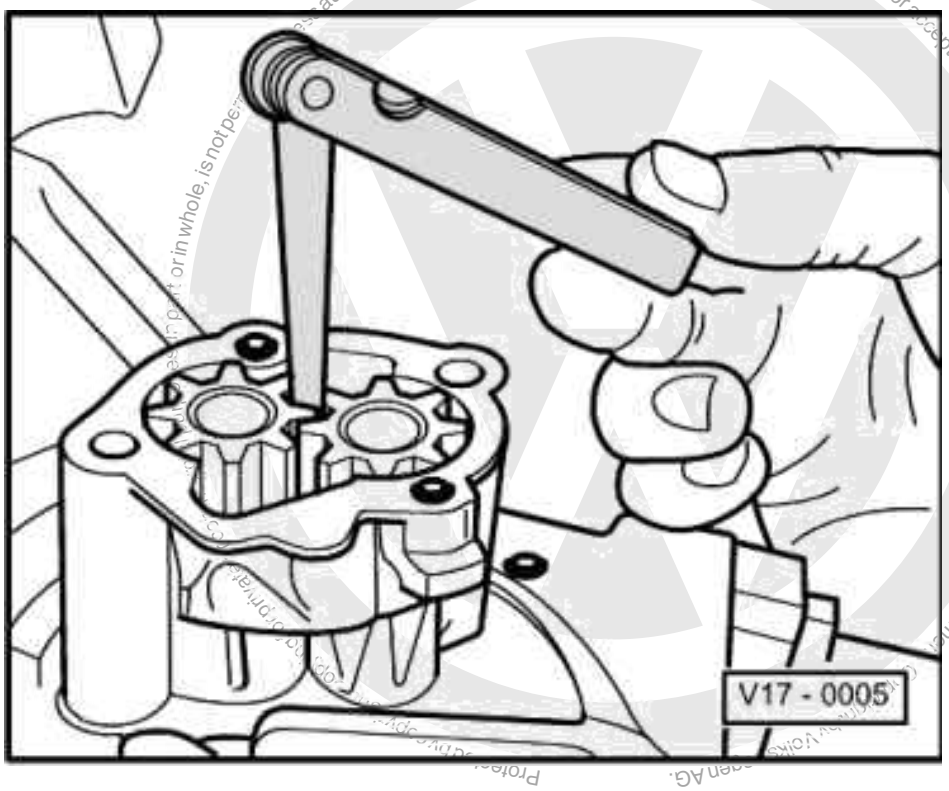

-> Fig. 1 Checking oil pump backlash

New: 0.05 mm

Wear limit: 0.20 mm

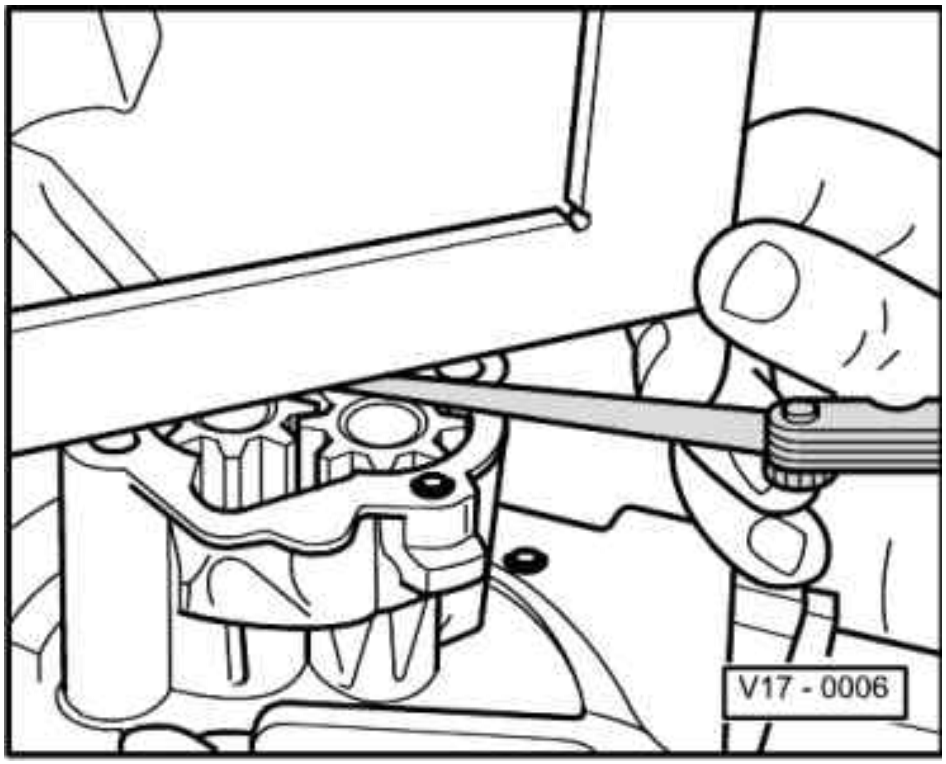

satelettronica

-> Fig. 2 Checking oil pump axial clearance

Wear limit: 0.15 mm

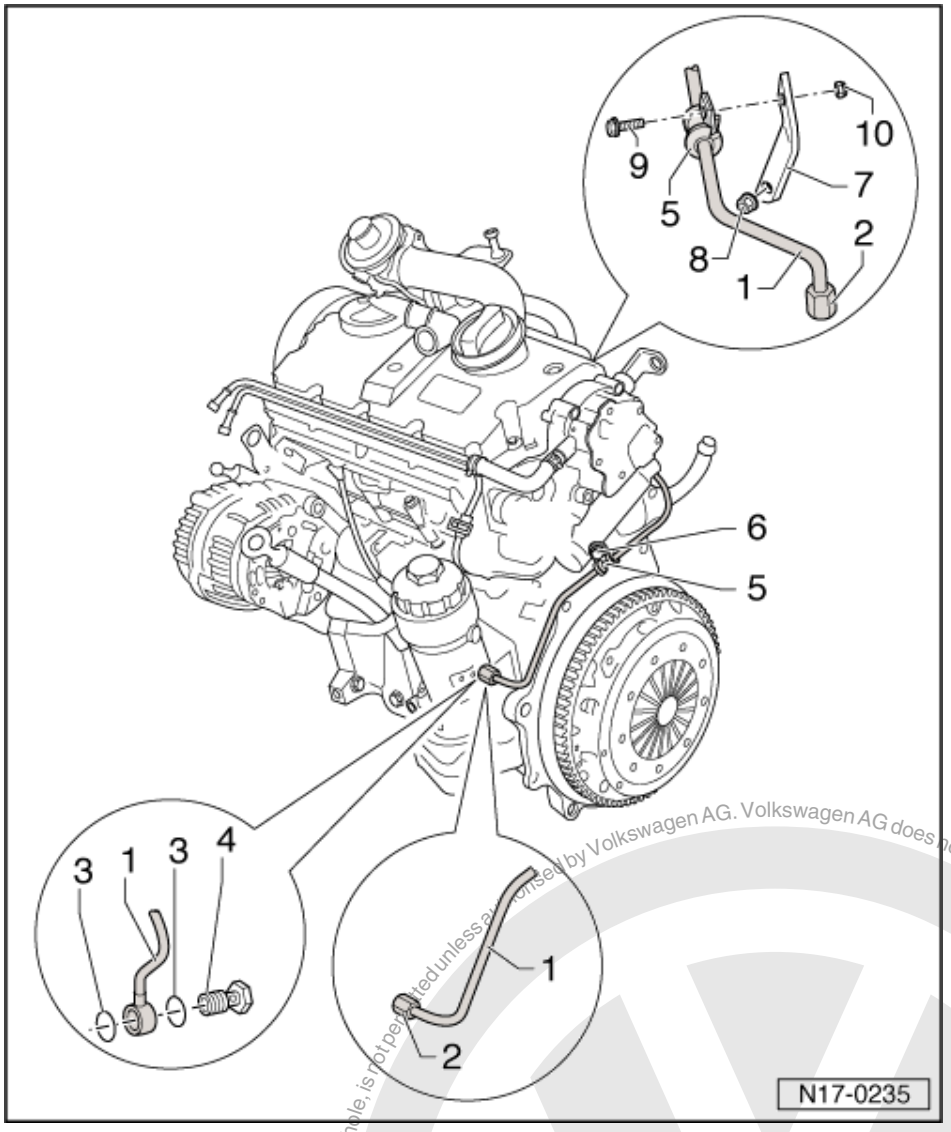

Part II

Assembly overview

1 Oil supply pipe
- To turbocharger

2 Union nut, 22 Nm
- When loosening and tightening counter-hold connection

3 Seal
- Renew

4 Banjo bolt, 25 Nm

5 Clip

6 10 Nm

7 Bracket

8 25 Nm

Protected by copyright. Copying for private or commercial purposes, in part or in whole, is not permitted unless authorised by Volkswagen AG. Volkswagen AG does not guarantee or accept any liability with respect to the correctness of information in this document. Copyright by Volkswagen AG.

satelettronica

- Renew

9 10 Nm

10 10 Nm

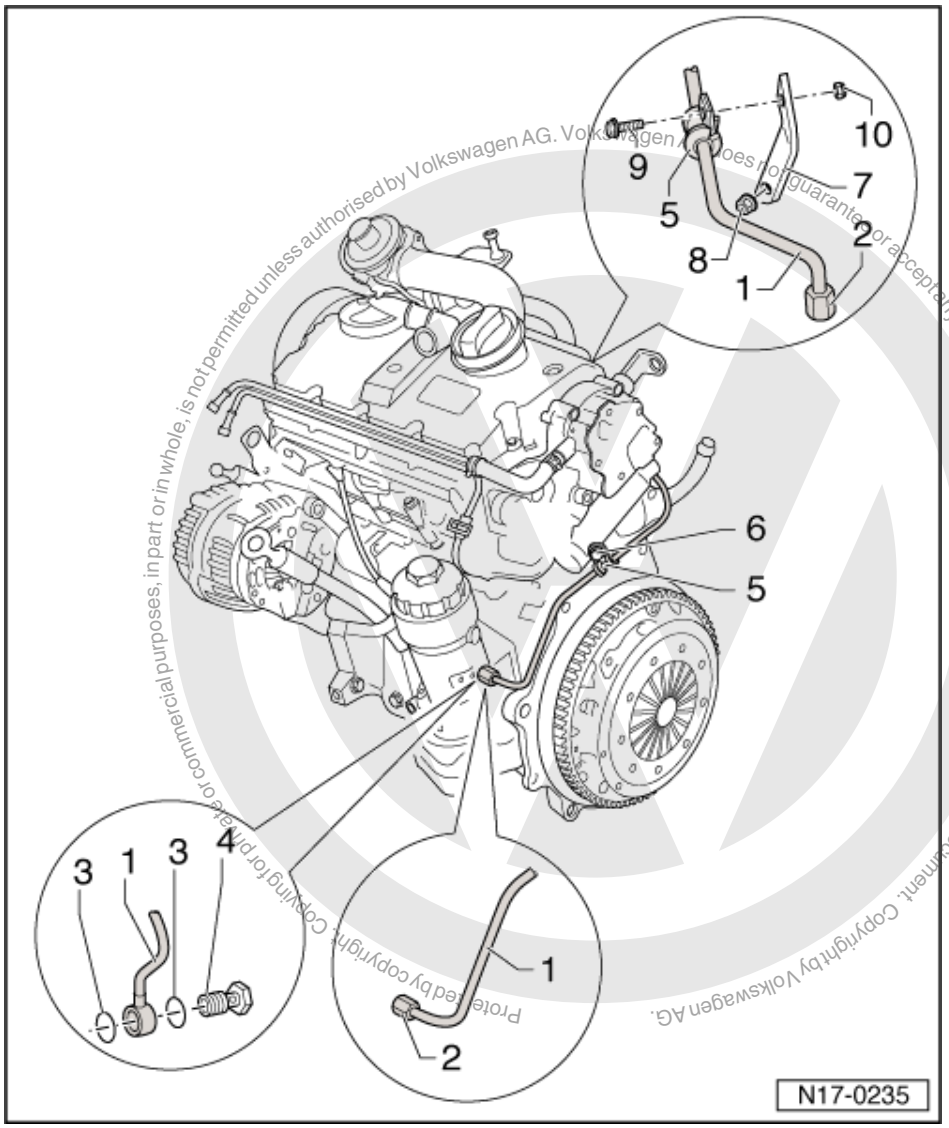

Protected by copyright. Copying for private or commercial purposes, in part or in whole, is not permitted unless authorised by Volkswagen AG. Volkswagen AG does not guarantee or accept any liability with respect to the correctness of information in this document. Copyright by Volkswagen AG.

satelettronica

Assembly sequence

Removing

- Remove noise insulation.
- Place drain tank V.A.G 1306 underneath.
- Remove air cleaner housing.
- Remove union nut -2- or banjo bolt -4- from oil filter bracket.
- Remove bolt -6-.
- Remove union nut -2- from exhaust turbocharger.
- Remove bolt -9- from bracket -7-.
- Remove nut -8- and take off bracket -7-.
- Remove oil supply line -1-.

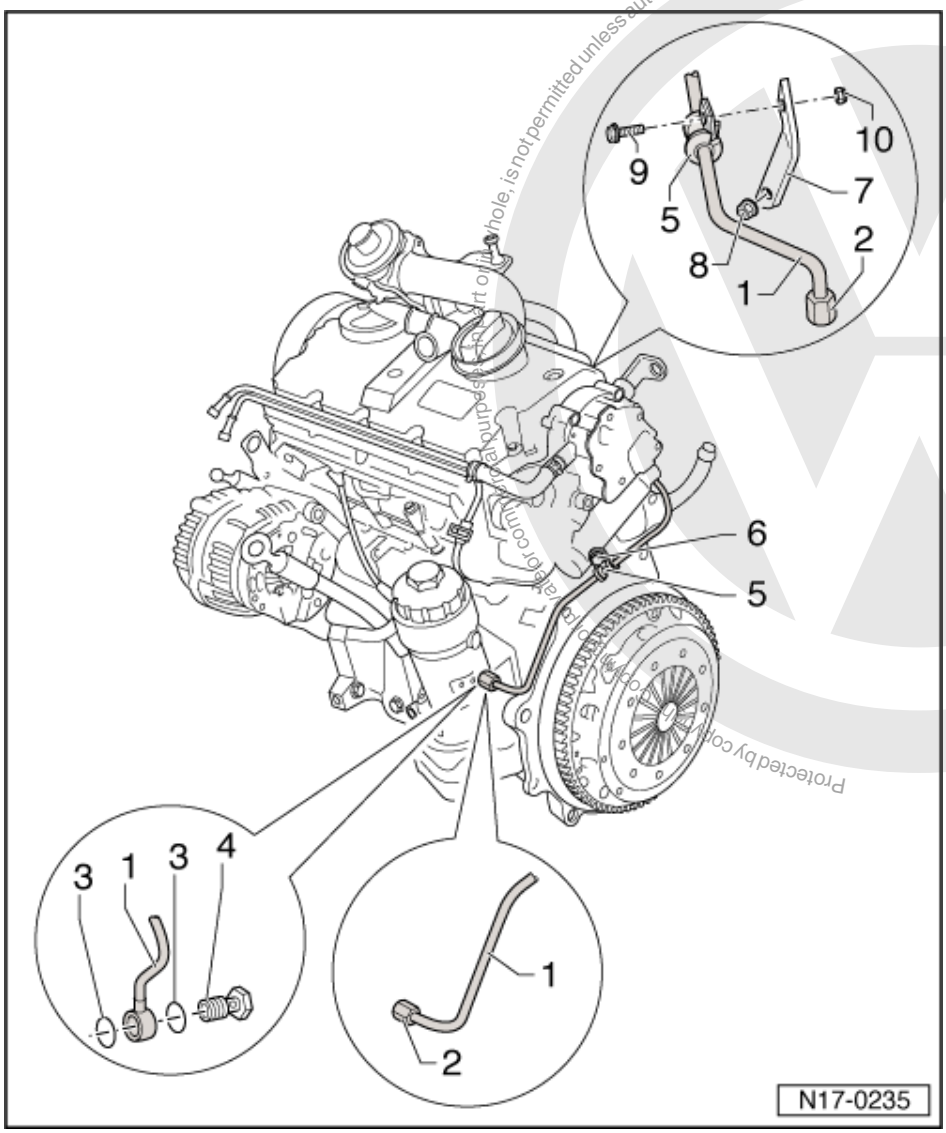

Protected by copyright. Copyright by Volkswagen AG. Volkswagen AG does not guarantee or accept any liability with respect to the correctness of information in this document. Copyright by Volkswagen AG.

satelettronica

Installing

Install in reverse order. When doing this note the following:

Warning! The installation of oil supply line must be carried out as described below.

- Screw bracket -7- with nut -8- loosely to exhaust manifold.
- Tighten union nut -2- or banjo bolt -4- on oil filter bracket by hand.
- Tighten union nut -2- on turbocharger by hand.
- Tighten union nut -2- or banjo bolt -4- on oil filter bracket to tightening torque.

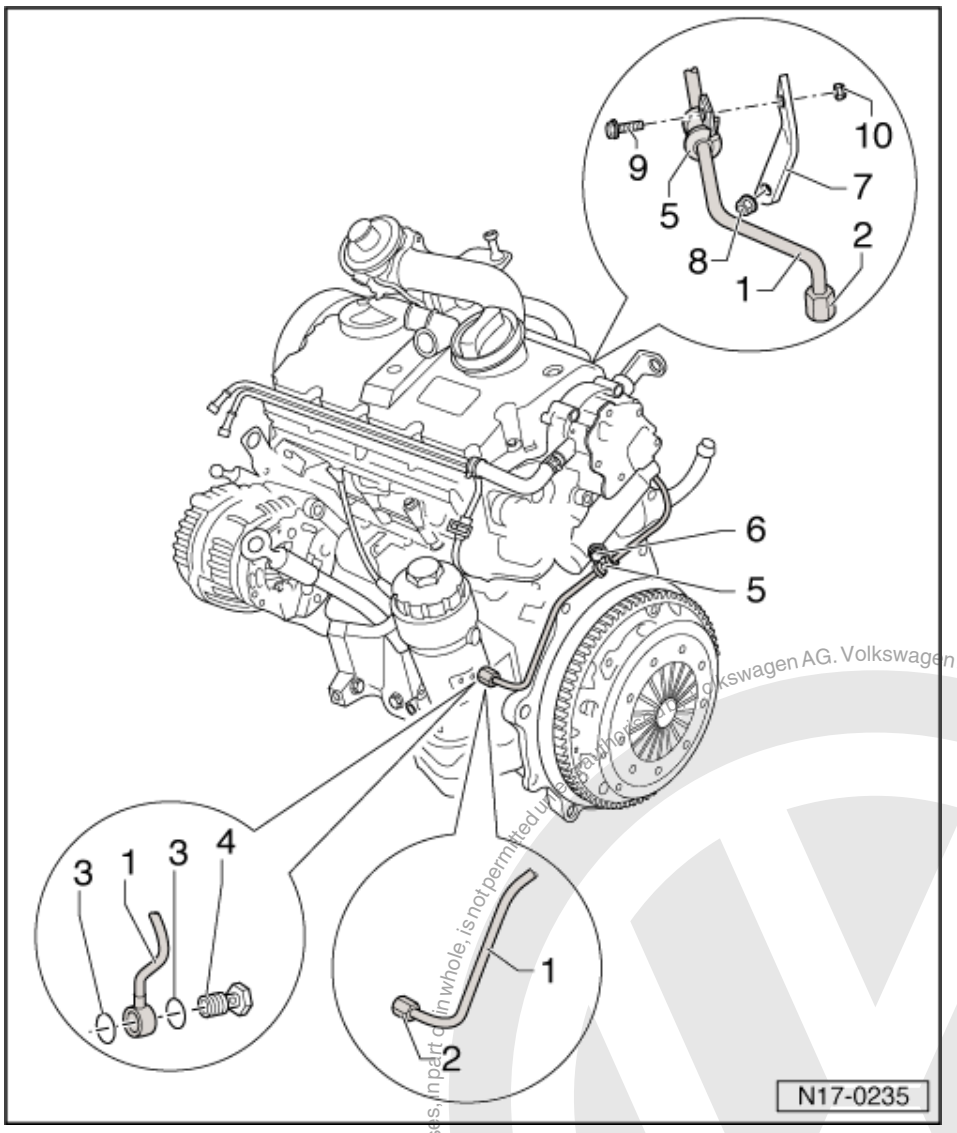

- Tighten union nut -2- on exhaust turbocharger to tightening torque.
- Position clamps -5- on oil supply line.
- Tighten bolts -6- and -9- to tightening torque.
- Tighten nut -8- to tightening torque.

1.2 - Checking oil pressure and oil pressure switch

Note:

Functional check and servicing the optical and acoustic oil pressure warning:

=> Current flow diagrams, Electrical fault finding and Fitting locations

Special tools, workshop equipment, testers, measuring instruments and auxiliary items required

- Oil pressure tester V.A.G 1342
- Diode test lamp V.A.G 1527
- Adapter set V.A.G 1594

satelettronica
Copyright by Volkswagen AG. Volkswagen AG does not guarantee or accept any liability with respect to the correctness of information in this document.

Test sequence

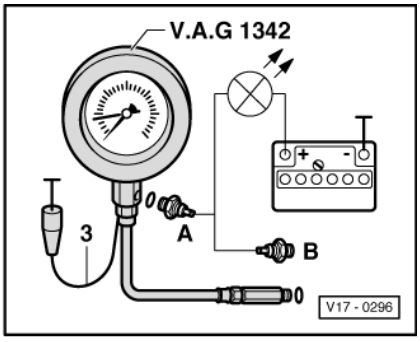

- -> Remove 0.25 bar oil pressure switch (blue insulation) and screw into tester.
- Screw tester into the cylinder head in place of the oil pressure switch.
- Connect brown wire -3- of tester to earth (-).

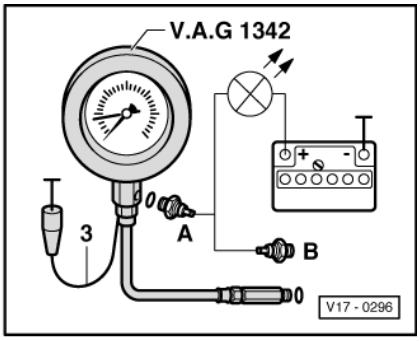

- -> Connect diode test lamp V.A.G 1527 using adapter cables from V.A.G 1594 to battery positive (+) and to 0.25 bar oil pressure switch (F22, blue insulation) -A-. LED must light up.
- Start engine and slowly raise rpm. At
  0.25 bar switch: 0.15...0.35 bar
  the LED must go out, otherwise renew oil pressure switch.
- Connect diode test lamp to 0.9 bar oil pressure switch (F1) -B-.
  At
  0.75...1.05 bar
  The LED must light up, otherwise renew oil pressure switch.
- Increase engine speed further.
  At 2000 rpm and an oil temperature of 80 °C the oil pressure should be at least 2.0 bar.

At higher engine speed the oil pressure must not exceed 7.0 bar. If necessary renew oil pump cover with pressure relief valve.

1.3 - Removing and installing oil sump cap

(Engine code AEY, AHB)

satelettronica

Removing

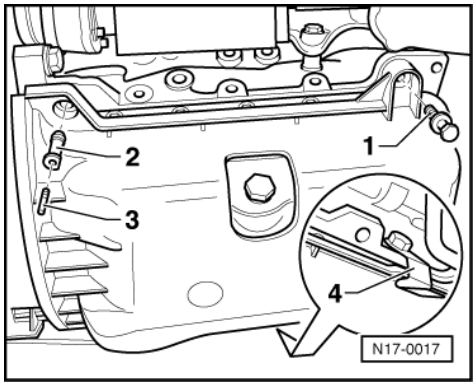

- -> Unscrew securing bolt -1- and remove spreader pin -3- from retaining clip -2-.
- Remove clamping spring -4- and take cap off oil sump.

Installing

- Fit cap and retaining clip and engage clamping spring.
- Tighten securing bolt -1- to
  10 Nm.
- Press on spreader pin -3-.

Protected by copyright. Copying for private or commercial purposes, in part or in whole, is not permitted unless authorised by Volkswagen AG. Volkswagen AG does not guarantee or accept any liability with respect to the correctness of information in this document. Copyright by Volkswagen AG.

satelettronica

19 - Cooling system

1 - Removing and installing parts of cooling system

1.1 - Removing and installing parts of cooling system

Notes:

- When the engine is warm the cooling system is under pressure. If necessary release pressure before commencing repair work.
- Hoses are secured with spring-type clips. In cases of repair only use spring-type clips.
- V.A.G 1921 pliers are recommended when installing spring-type clips.

Carry out cooling system leakage check with V.A.G 1274 and 1274/3.

Parts of cooling system body side =>Page 93 .

Parts of cooling system engine side => 97 .

Draining and filling with coolant=> Page 101

Coolant mixture ratios => Page 101 , draining and filling with coolant

Volkswagen AG. Volkswagen AG does not guarantee or accept any liability with respect to the correctness of information in this document. Copyright by Volkswagen AG.
Protected by copyright. Copying for private or commercial purposes, in part or in whole, is not permitted unless authorised by Volkswagen AG.
satelettronica

1.2 - Parts of cooling system body side

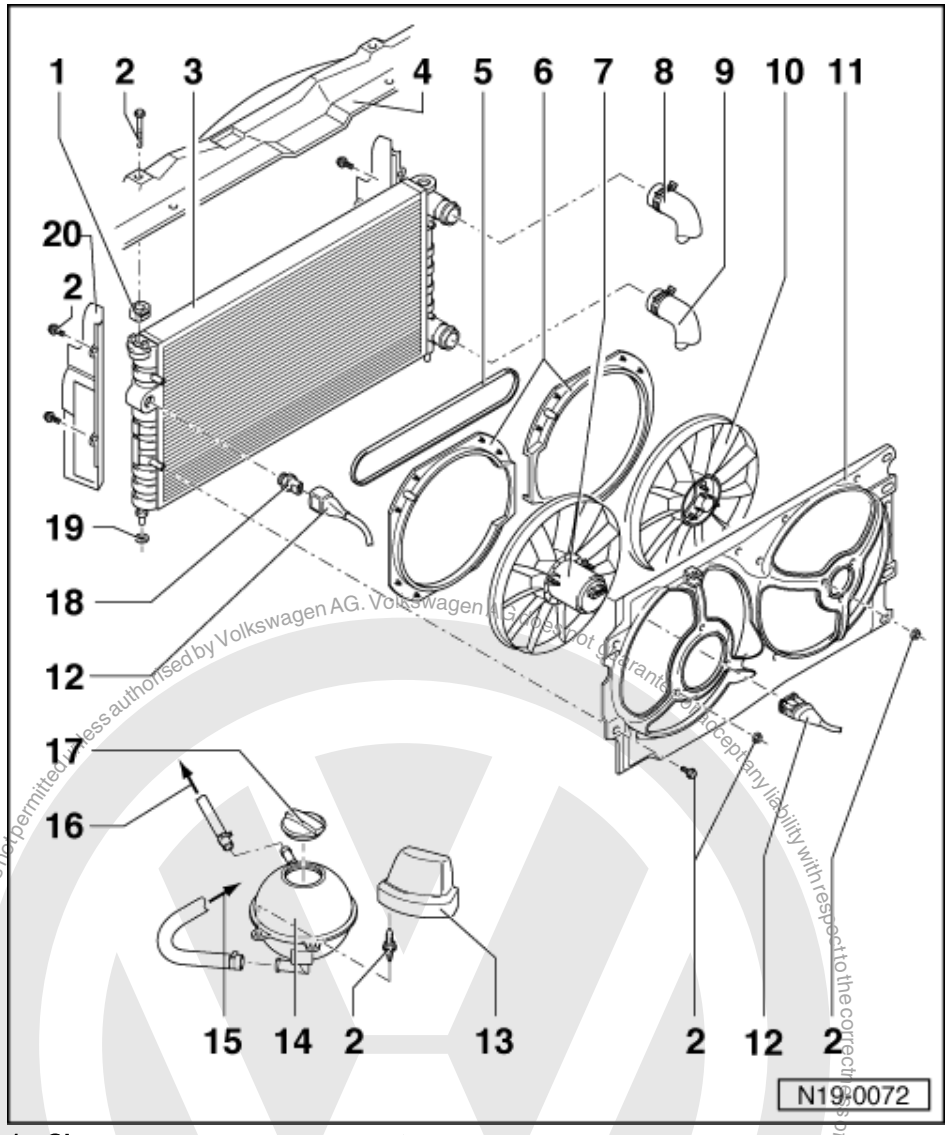

1 Clamp
2 10 Nm
3 Radiator
- Removing and installing =>Page 103
- After replacing renew entire coolant

4 Lock carrier
5 V-belt
- Only with optional extras

6 Guide ring
- Note fitting position
- Secured on fan ring item 11 with clips

satelettronica

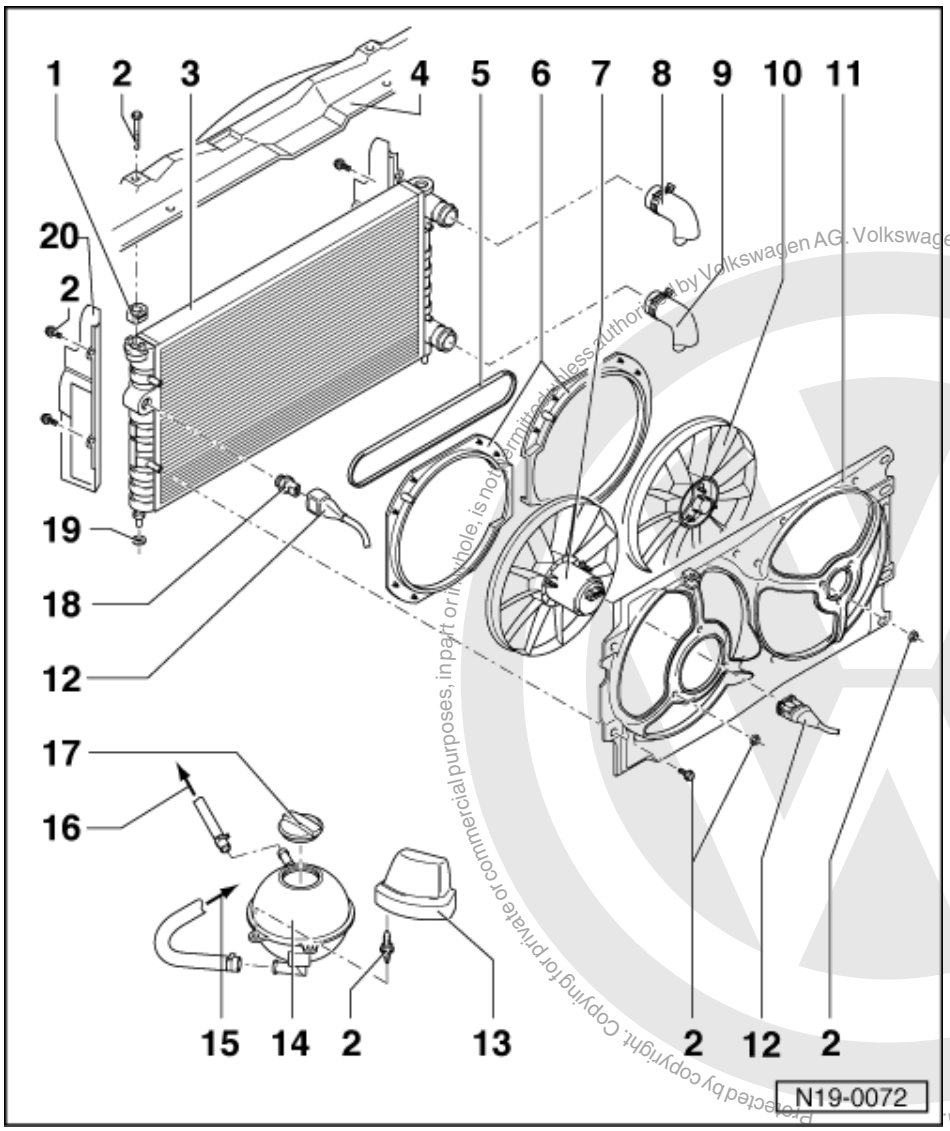

7 Radiator fan (V7)
- Removing and installing
  =>Page 103

8 Upper coolant hose
- For engine codes AFN, AHU, AKW, ALE on the other side of radiator
- To connection
  =>Page 99 , Item 19

9 Lower coolant hose
- For engine codes AFN, AHU, AKW, ALE on the other side of radiator
- To coolant pump
  =>Page 98 , Item 13

10 Additional fan
- Only with optional extras
- Removing and installing
  =>Page 103

11 Fan ring

Protected by copyright. Copying for private or commercial purposes, in part or in whole, is not permitted unless authorised by Volkswagen AG. Volkswagen AG does not guarantee or accept any liability with respect to the correctness of information in this document. Copyright by Volkswagen AG.
satelettronica

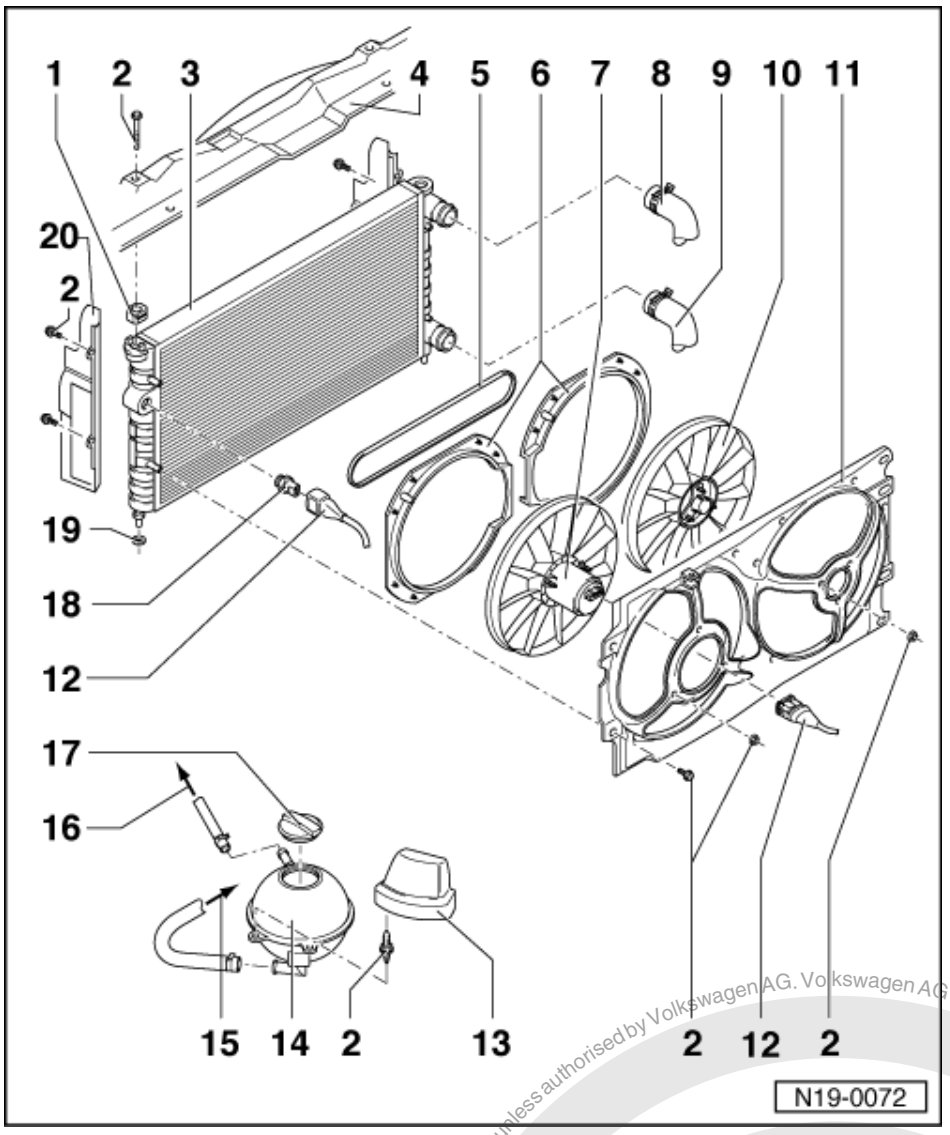

12 Connector
13 Cover
14 Expansion tank
15 To coolant pipe
- =>Page 98 , Item 9

16 To connection
- Engine codes: AEY, AFN, AHB, ALE, 1Y
- =>Page 98 , Item 3
- For engine codes AHU, AKW to upper coolant hose

17 Cap
- Check with V.A.G 1274 and 1274/4
- Test pressure 1.4...1.6 bar

satelettronica
Protected by copyright. Copyright for private or commercial purposes, in part or in whole, is not permitted unless authorised by Volkswagen AG. Volkswagen AG does not guarantee or accept any liability with respect to the correctness of information in this document. Copyright by Volkswagen AG.

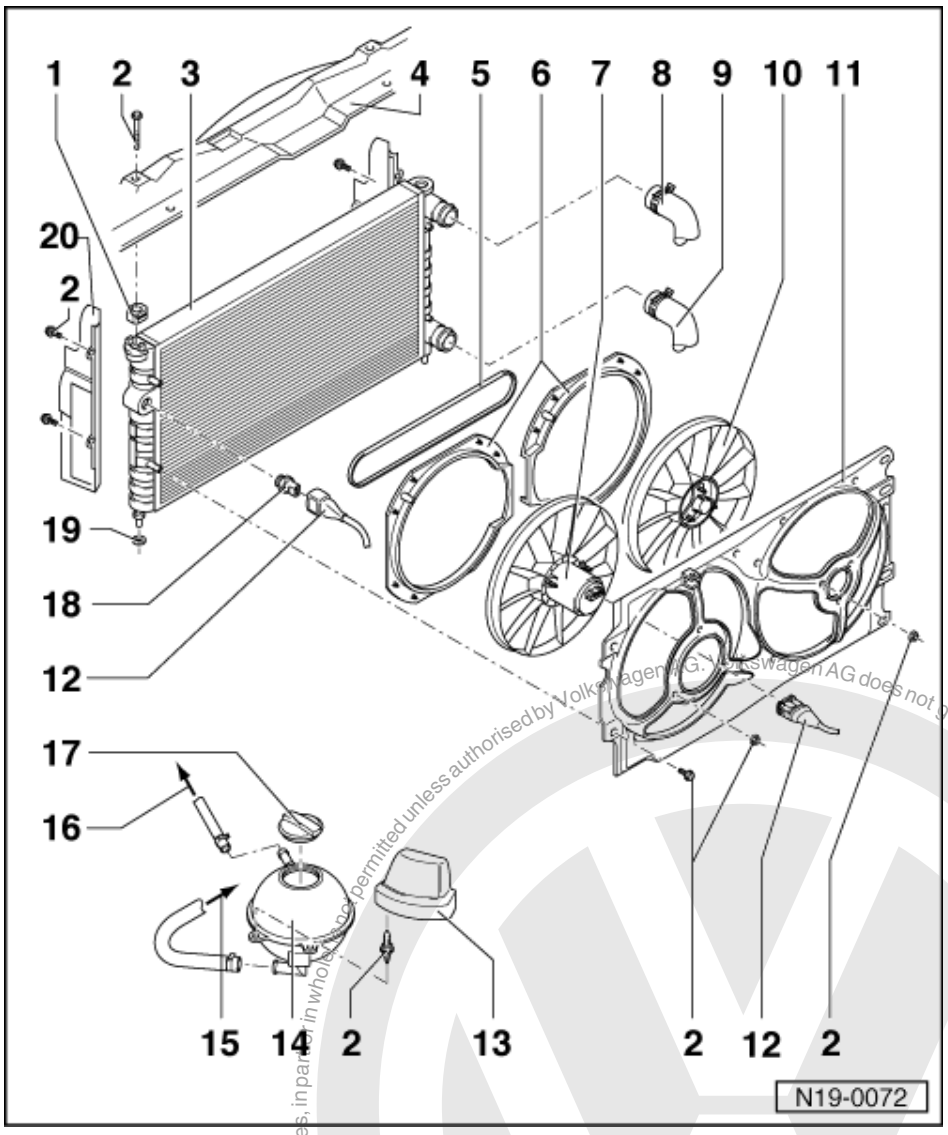

18 Thermo-switch (F18), 35 Nm

- For electric fan
- Switching temperatures:
  Stage 1
  on: 92...97 °C
  off: 84...91 °C
  Stage 2
  on: 99...105 °C
  off: 91...98 °C
- Only with optional equipment, additional thermo switch (F165) for 3rd stage

19 Rubber washer

20 Air ducting

Protected by copyright. Copyright by Volkswagen AG.
Copyright by Volkswagen AG. Volkswagen AG does not guarantee or accept any liability with respect to the correctness of information in this document.
Copying for private or commercial purposes, in part or in whole, is not permitted unless authorised by Volkswagen AG.
satelettronica

1.3 - Parts of cooling system engine side

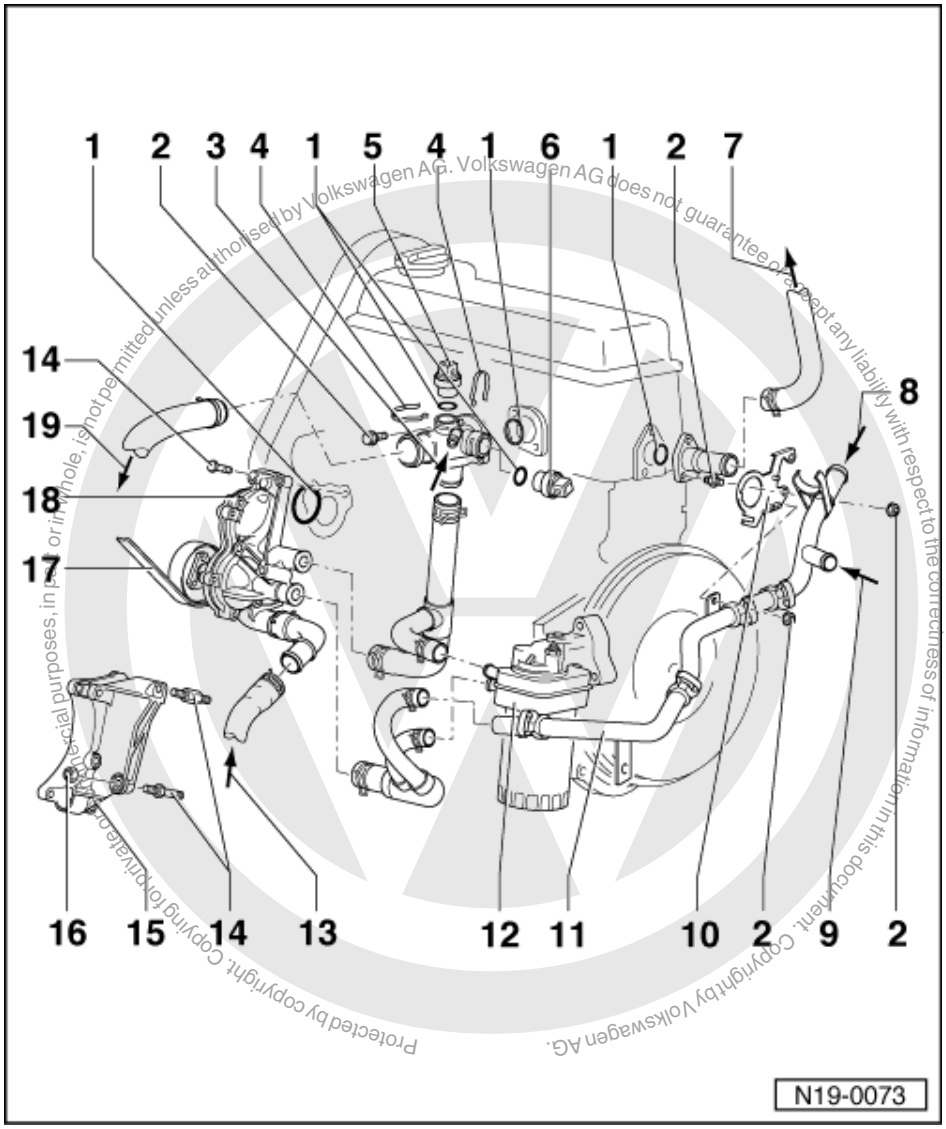

1 O ring
- Renew

2 10 Nm

3 From expansion tank
- Engine codes: AEY, AFN, AHB, ALE, 1Y
- =>Page 95 , Item 16

4 Retaining clip

5 Air conditioner cut-off thermo switch (F163) and radiator fan 3rd speed thermo switch (F165)
- Only engine code 1Y
- Brown, 4 pin
- On vehicles with air conditioning

satelettronica

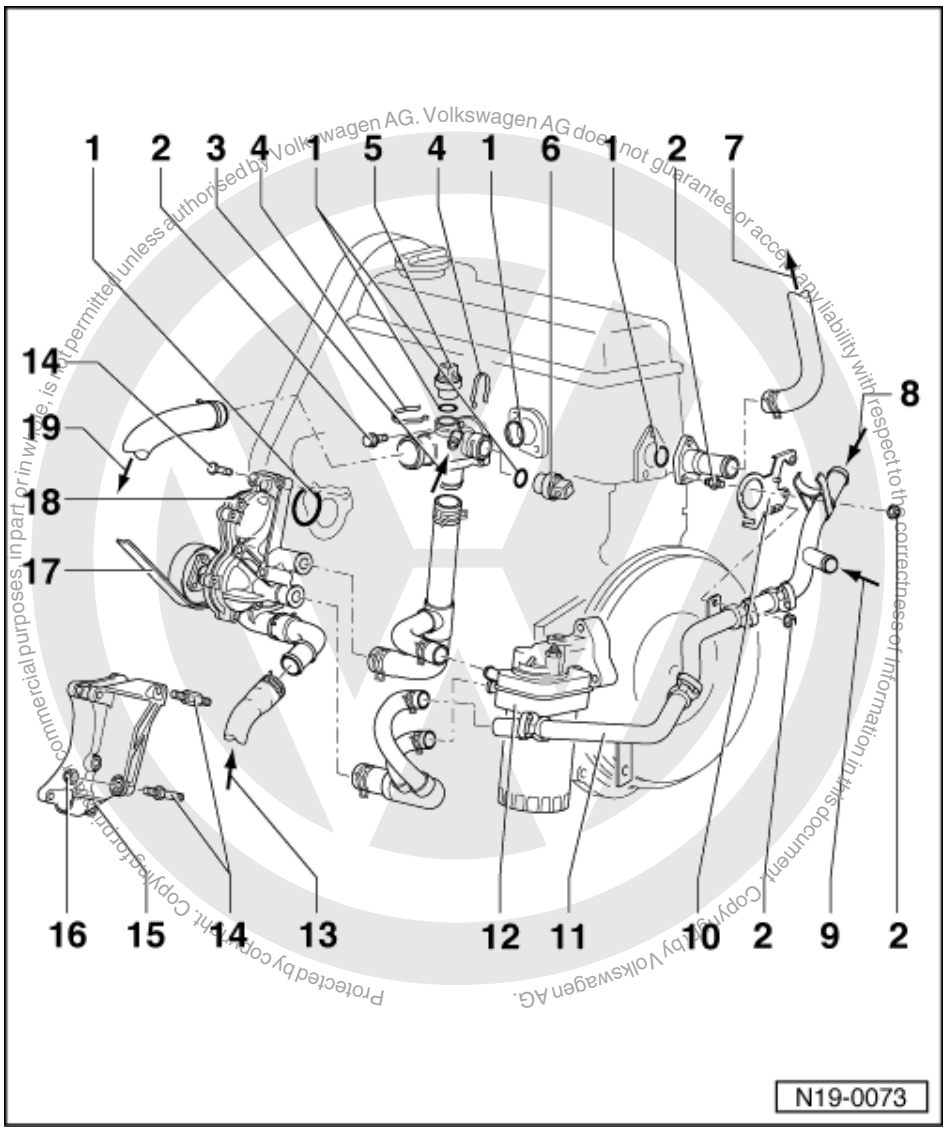

6 Coolant temperature sender (G62) or temperature sender (G27)
- With coolant temperature gauge sender (G2)

7 To heat exchanger

8 From heat exchanger

9 From expansion tank
- =>Page 95 , Item 15

10 Bracket

11 Coolant pipe

12 Oil cooler
- Removing and installing
  =>Page 82 , Item 14

13 From bottom of radiator
- =>Page 94 , Item 9

satelettronica

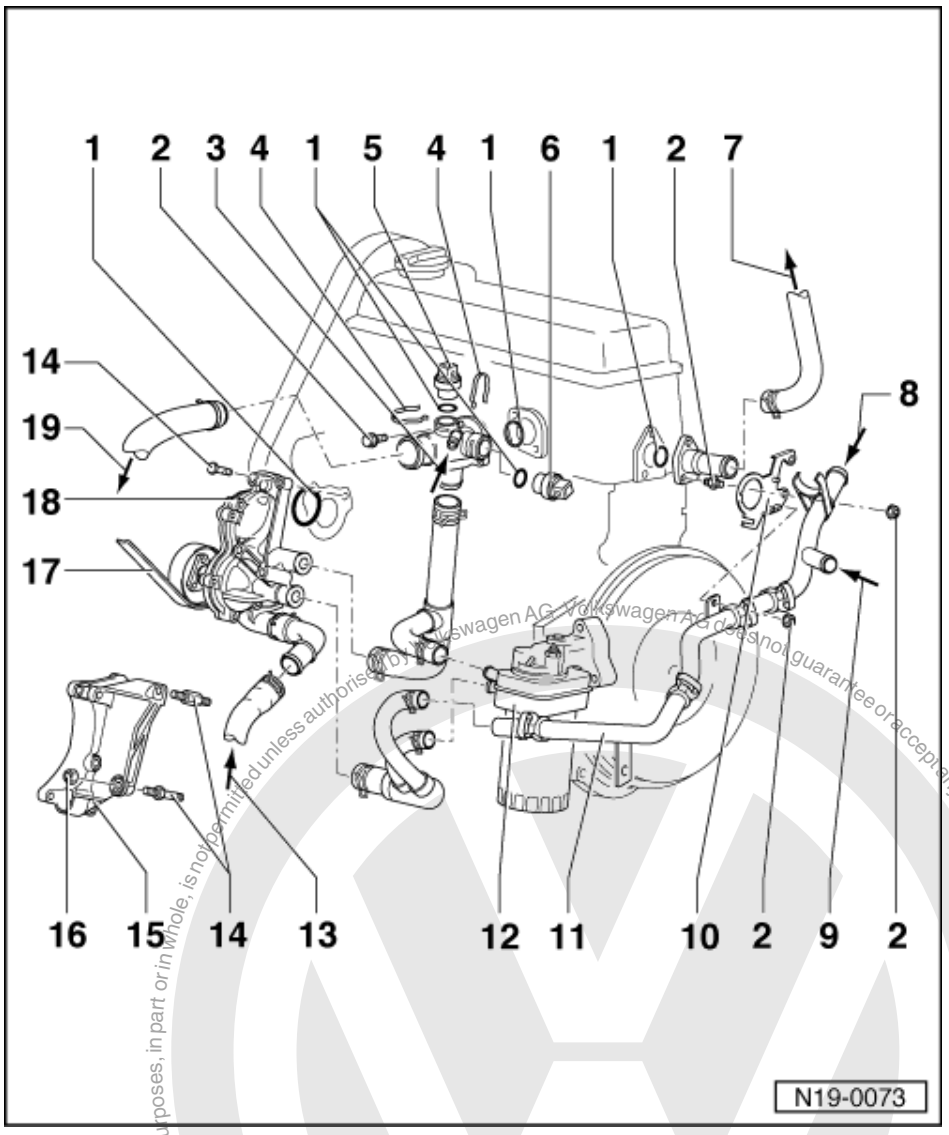

14 20 Nm + 1/4 turn (90 °) further

- Renew

15 Bracket

- For ribbed belts without tensioner

16 30 Nm

17 V-belt/ribbed belt

- Removing and installing ribbed belt => Page 26
- Adjusting V-belt tension:

=> Running gear; Repair group 48; Assembly overview: vane pump, reservoir, hydraulic pipes Assembly overview: vane pump, reservoir, hydraulic pipes

18 Coolant pump

- Dismantling and assembling => Page 100

19 To top of radiator

- =>Page 94 , Item 8

Protected by Copyright. Copyright by Volkswagen AG. Volkswagen AG does not guarantee or accept any liability with respect to the correctness of information in this document. Copyright by Volkswagen AG. Protected by Copyright. Copyright by Volkswagen AG. Volkswagen AG does not guarantee or accept any liability with respect to the correctness of information in this document. Copyright by Volkswagen AG. Protected by Copyright. Copyright by Volkswagen AG. Volkswagen AG does not guarantee or accept any liability with respect to the correctness of information in this document. Copyright by Volkswagen AG. Protected by Copyright. Copyright by Volkswagen AG. Volkswagen AG does not guarantee or accept any liability with respect to the correctness of information in this document. Copyright by Volkswagen AG. Protected by Copyright. Copyright by Volkswagen AG. Volkswagen AG does not guarantee or accept any liability with respect to the correctness of information in this document. Copyright by Volkswagen AG. Protected by Copyright. Copyright by Volkswagen AG. Volkswagen AG does not guarantee or accept any liability with respect to the correctness of information in this document. Copyright by Volkswagen AG. Protected by Copyright. Copyright by Volkswagen AG. Volkswagen AG does not guarantee or accept any liability with respect to the correctness of information in this document. Copyright by Volkswagen AG.
satelettronica

1.4 - Dismantling and assembling coolant pump

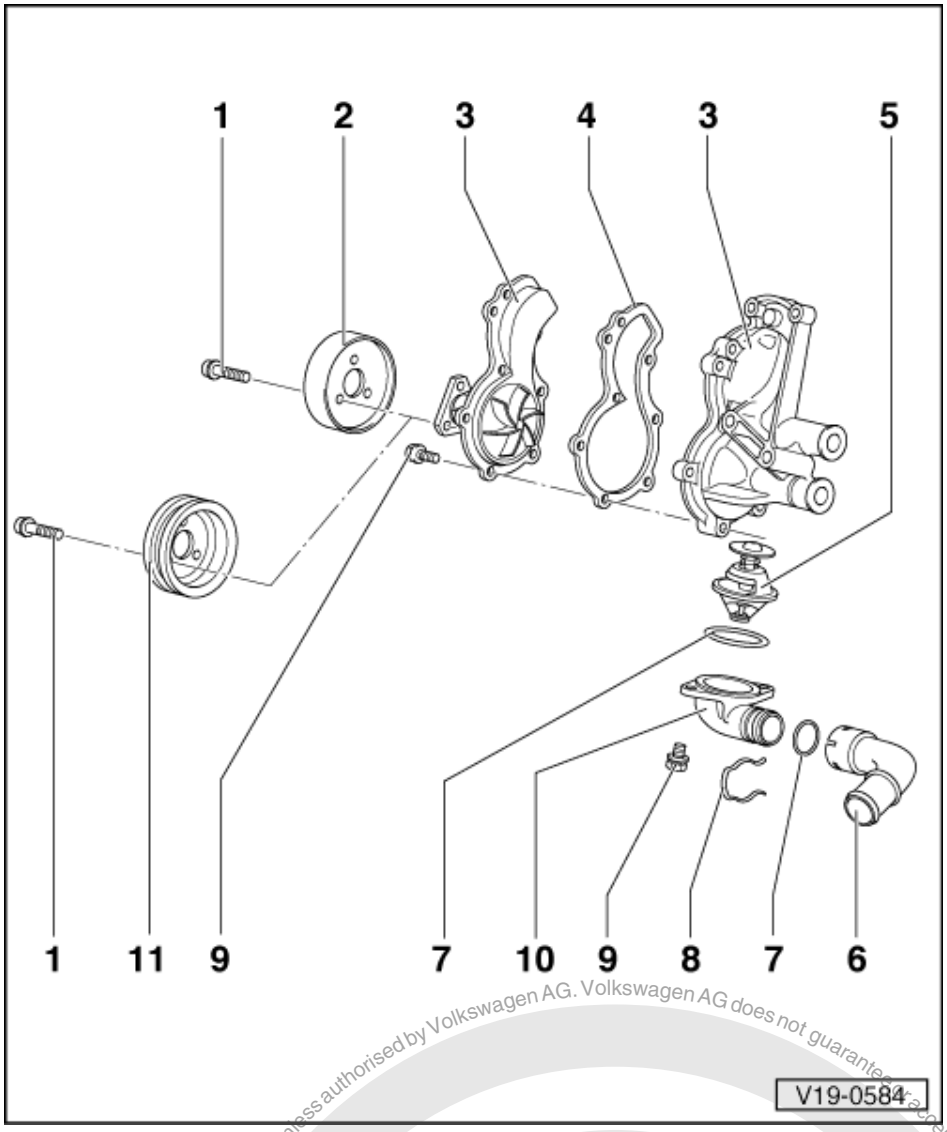

1 25 Nm
2 Belt pulley
- Version for ribbed belt

3 Coolant pump
- Check for ease of movement

4 Gasket
- Renew

5 Coolant thermostat
- Checking: heat-up thermostat in water
- Opening commences approx. 85 °C
- Ends approx. 105 °C
- Opening lift min. 7 mm

6 Connection

satelettronica
Protected by copyright. Copying for private or commercial purposes, in whole or in part, is not permitted unless authorised by Volkswagen AG. Volkswagen AG does not guarantee or accept any liability with respect to the correctness of information in this document. Copyright by Volkswagen AG.

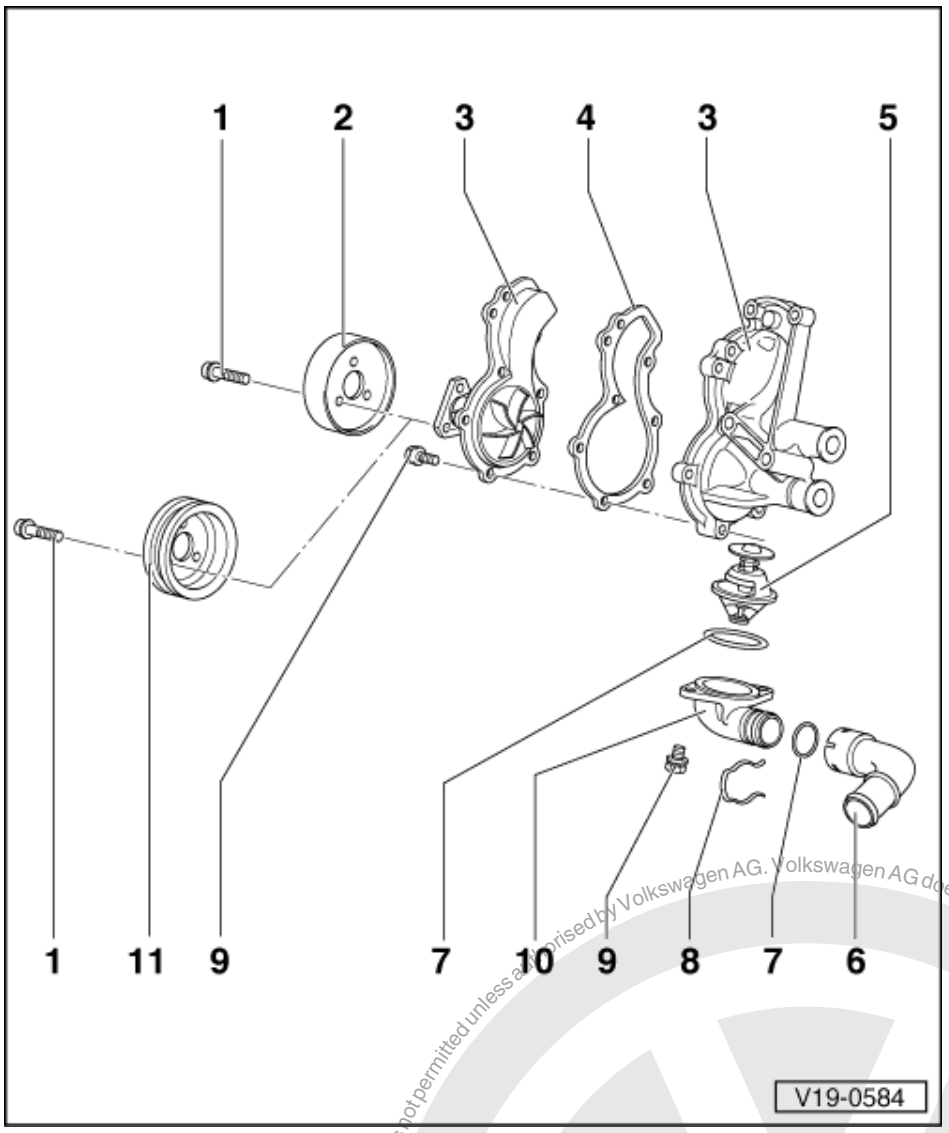

7 O-ring
- Renew

8 Retaining clip

9 10 Nm

10 Flange

11 Pulley
- Version for V-belt

1.5 - Draining and filling cooling system

Special tools, workshop equipment, testers, measuring instruments and auxiliary items required

- Drip tray V.A.G 1306
- Pliers V.A.G 1921 for spring type clips
- Anti-freeze tester
- Cooling system charging unit VAS 6096

Draining

- Remove cap from coolant expansion tank.

Protected by copyright. Copying for private or commercial purposes, in part or in whole, is not permitted unless authorised by Volkswagen AG. Volkswagen AG does not guarantee or accept any liability with respect to the correctness of information in this document. Copyright by Volkswagen AG.
satelettronica

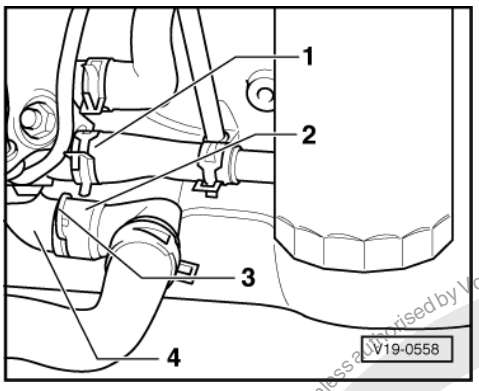

- -> Pull out retaining clip -3-, pull connection -2- off thermostat flange -4- and pull off coolant hose -1- or remove thermostat flange -4-.

Note:

Observe disposal regulations!

Filling

Notes:

- Only use coolant additive G 12 in accordance with TL VW 774 F.
  Distinguishing feature: coloured violet
- G 12 and coolant additives marked "In accordance with TL VW 774 F" prevent frost and corrosion damage, scaling and also raise boiling point of coolant. For this reason the system must be filled all year round with frost and corrosion protection additives.
- G 12 violet (in accordance with TL VW 774 F) can be mixed with the previous coolant additives G 11 and G 12 red!
- Because of its high boiling point, the coolant improves engine reliability under heavy loads, particularly in countries with tropical climates.
- Protection against frost must be assured to about -25 °C (in arctic climatic countries to about -35 °C).
- The coolant concentration must not be reduced by adding water even in warmer seasons and in warmer countries. The anti-freeze ratio must be at least 40 %.

- If for climatic reasons a greater frost protection is required, the amount of G 12 can be increased, but only up to 60 % (frost protection to about -40 °C), as otherwise frost protection is reduced again and cooling effectiveness is also reduced.
- If radiator, heat exchanger, cylinder head or cylinder head gasket is replaced, do not reuse old coolant.

Recommended mixture ratios:

Frost pro- tec- tion to	Anti-freeze amount	G 121)	Water1)
-25 °C -35 °C	40 % 50 %	2.6 ltr. 3.25 ltr.	3.9 ltr. 3.25 ltr.

1) The quantity of coolant can vary depending upon the vehicle equipment.

With cooling system charging unit VAS 6096:

- Screw adapter from V.A.G 1274 suitable for this vehicle onto expansion tank.
- Fill coolant circuit using cooling system charging unit VAS 6096.

=> Operating instructions for cooling system charging unit VAS 6096

Without cooling system charging unit VAS 6096:

Protected by copyright. Copyright Volkswagen AG. Volkswagen AG does not guarantee or accept any liability with respect to the correctness of information in this document. Copyright by Volkswagen AG. Reproduction, in part or in whole, is not permitted unless authorised by Volkswagen AG.
satelettronica

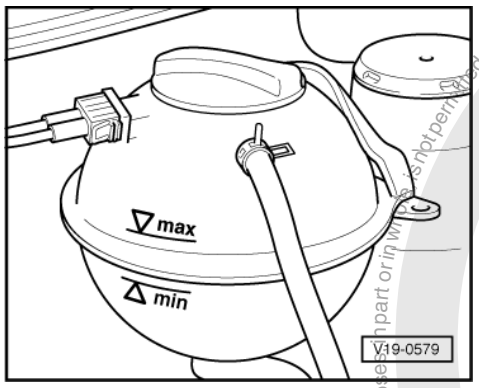

- -> Slowly fill with coolant up to max. mark on expansion tank (filling time approx. 5 minutes).
- Start engine and run at approx. 1500 rpm for max. 2 minutes and at the same time fill with coolant up to over-flow hole on expansion tank.
- Fit expansion tank cap.
- Run engine until radiator fan cuts-in.
- Check coolant level and replenish as necessary. When the engine is at normal operating temperature, the coolant level must be on the max. mark, when the engine is cold, between the min. and max. marks.

1.6 - Removing and installing radiator and radiator fan

Special tools, workshop equipment, testers, measuring instruments and auxiliary items required

- Drip tray V.A.G 1306
- Pliers V.A.G 1921 for spring type clips

Removing

- Drain coolant => Page 101
- Pull coolant hoses off radiator.

Vehicles with air conditioning system:

- Observe additional information and removal work => Page 104 .

- Remove radiator and trim.
- Remove left-hand headlight:

=> Electrical system; Repair group 94; servicing headlights servicing headlights

- Pull connectors off thermo-switch and radiator fan.
- Remove radiator fan together with fan ring.
- Remove radiator securing bolts and take out radiator to the front.

Installing

Installation is carried out in the reverse order, when doing this note the following:

- Filling with coolant => Page 101
- Electrical connections and routing:

=> Current flow diagrams, Electrical fault finding and Fitting locations

- Check headlight adjustment and adjust if necessary:

=> Maintenance

Protected by copyright. Copying for private or commercial purposes, in part or in whole, is not permitted unless authorised by Volkswagen AG. Volkswagen AG does not guarantee or accept any liability with respect to the correctness of information in this document. Copyright by Volkswagen AG.
satelettronica

Additional information and removal work on vehicles with air conditioner

Warning!
The air conditioning system refrigerant circuit must not be opened.

Note:

To prevent damage to condenser and also to the refrigerant lines/hoses, ensure that the pipes and hoses are not stretched, kinked or bent.

- Removing lock carrier with attachments:

=> General body repairs; Repair group 50; Lock carrier; Removing and installing lock carrier with grille Lock carrier Removing and installing lock carrier with grille

- Remove air cleaner.
- Remove air conditioner fluid reservoir and allow to hang free.
- Remove radiator securing bolts.
- Remove retaining clamp(s) from refrigerant pipes.
- Remove condenser from radiator and pull forward as far as is possible.
- Pull radiator out between condenser and lock carrier.
- Secure condenser to body so that refrigerant pipes/hoses are not stressed.
- Check headlight adjustment and adjust if necessary:

=> Maintenance

Protected by copyright. Copyright for private or commercial purposes, in whole, is not permitted unless authorised by Volkswagen AG. Volkswagen AG does not guarantee or accept any liability with respect to the correctness of information in this document. Copyright by Volkswagen AG.

satelettronica

20 - Fuel supply system

Protected by copyright. Copying for private or commercial purposes, in part or in whole, is not permitted unless authorised by Volkswagen AG. Volkswagen AG does not guarantee or accept any liability with respect to the correctness of information in this document. Copyright by Volkswagen AG.

1 - Removing and installing parts of fuel supply system

1.1 - Removing and installing parts of fuel supply system

Notes:

- Hose connections are secured with either screw-type or spring-type clips.
- Always replace clamp-type clips with screw or spring-type clips.

Removing and installing fuel tank with its attachments, Polo Classic, Polo Estate => Page 106 .

Removing and installing fuel tank with its attachments, Caddy => Page 110 .

Servicing fuel filter => Page 115 .

Observe safety precautions=> Page 117 .

Observe rules for cleanliness => Page 117 .

Servicing accelerator mechanism => Page 119

satelettronica

1.2 - Removing and installing fuel tank with its attachments, Polo Classic, Polo Estate

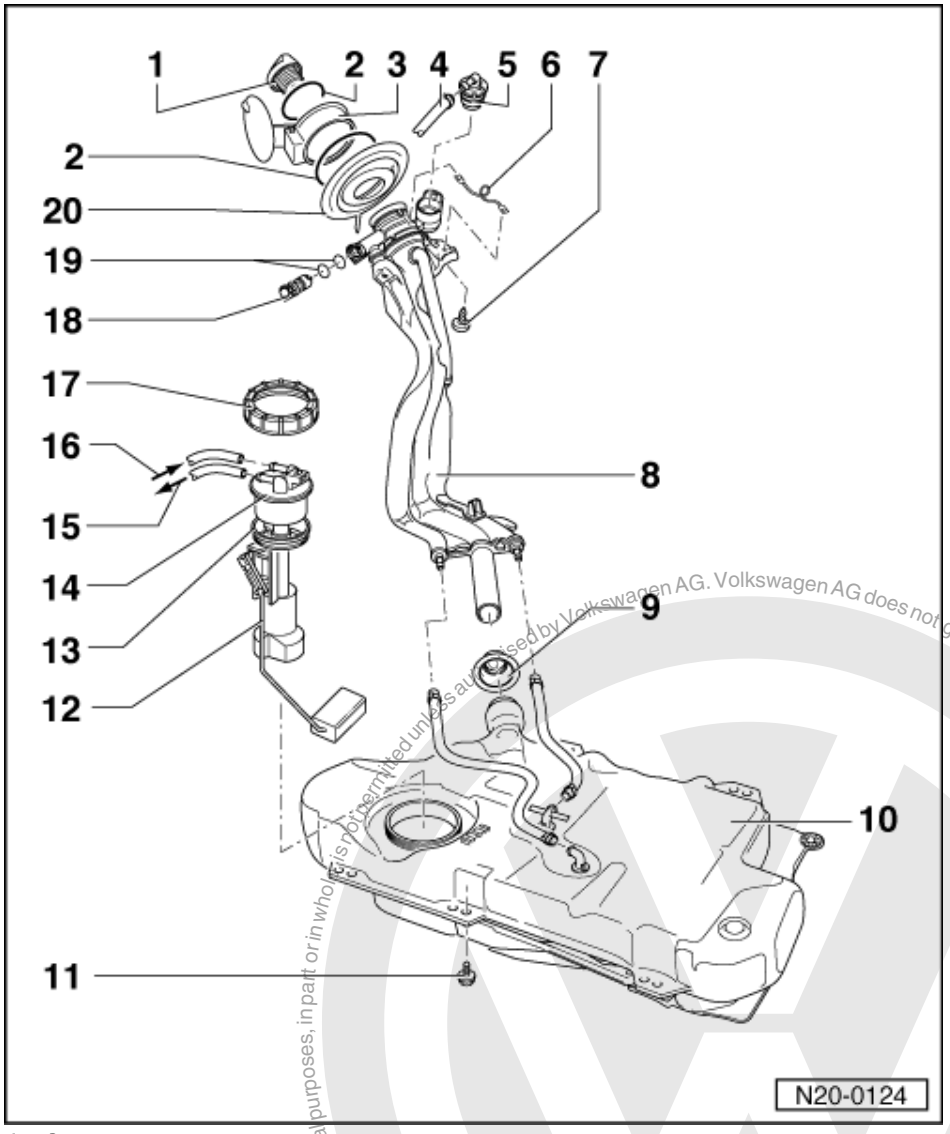

1 Cap
2 Retaining ring
3 Tank flap unit
- Removing and installing

=> General body repairs; Repair group 55; fuel flap unit fuel flap unit

4 Vent pipe

Protected by copyright. Copyright by Volkswagen AG.
Copyright by Volkswagen AG. Volkswagen AG does not guarantee or accept any liability with respect to the correctness of information in this document.
satelettronica

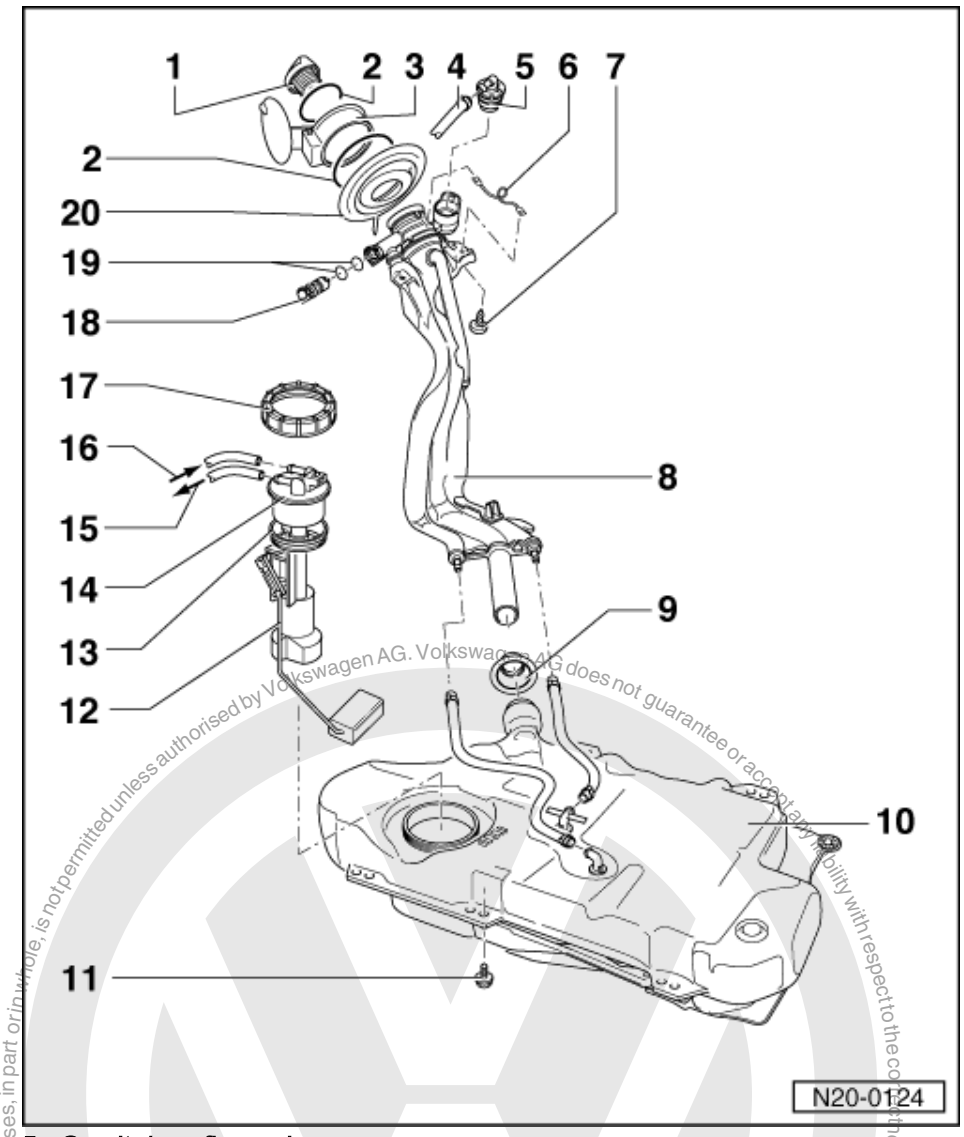

5 Gravity/overflow valve
- To remove, release locking lug and unclip valve upwards out of filler neck
- Check valve for through-flow
  valve vertical: open,
  valve tilted 90 °: closed

6 Earth connection

7 4 Nm

8 Filler pipes
- With non-return valve

9 Sealing boot
- After installing filler pipes fit over fuel tank connections, having turned boot inside out

Protected by copyright. Copy or duplicate for commercial purposes, in part or in whole, is not permitted unless authorised by Volkswagen AG. Volkswagen AG does not guarantee or accept any liability with respect to the correctness of information in this document. Copyright by Volkswagen AG.
satelettronica

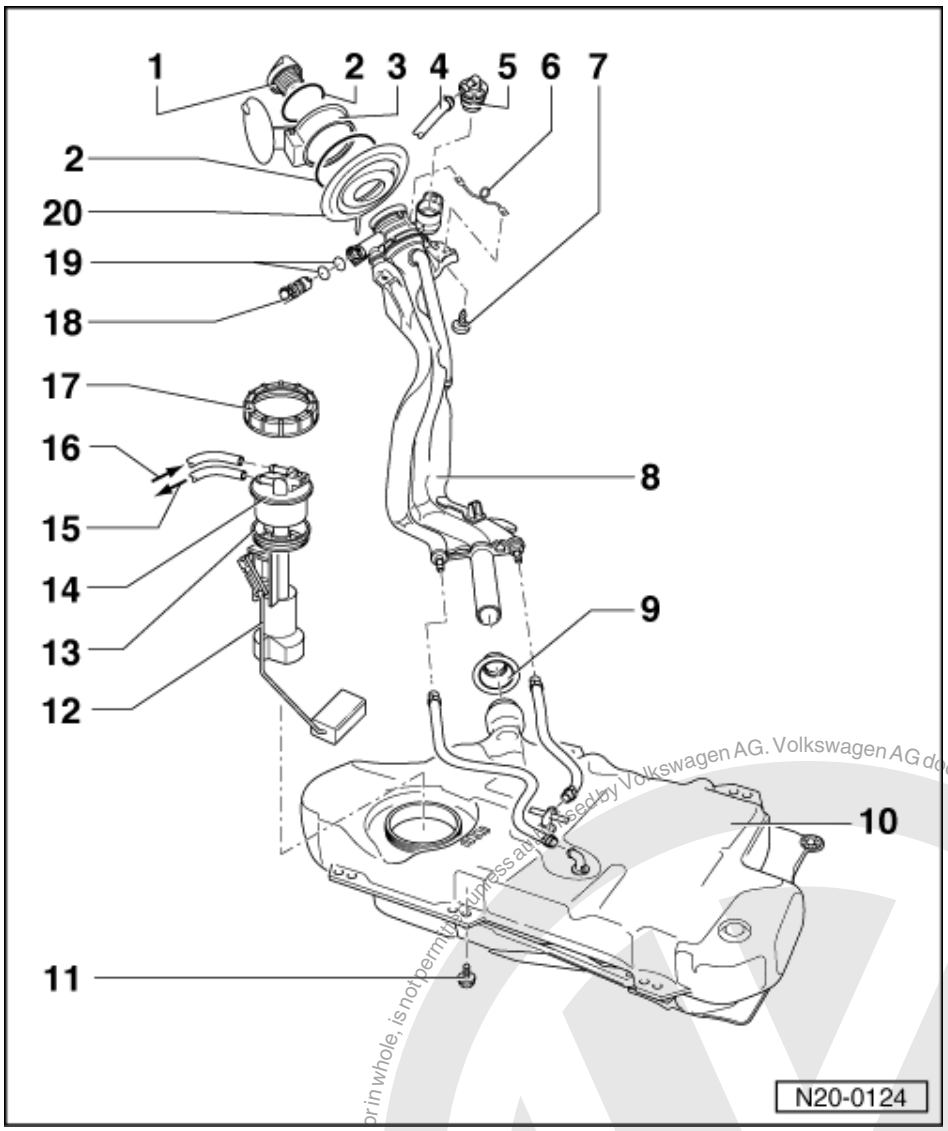

10 Fuel tank
- Removing and installing
  => Page 117
- Press clamping washer from heat shield tightly onto pins on vehicle floor

11 25 Nm

12 Fuel gauge sender
- Note fitting position on fuel tank => Fig. 1
- Sender with strainer telescopic to upper part

13 Sealing ring
- Coat with fuel when installing
- Renew if damaged

14 Flange
- Note fitting position on fuel tank => Fig. 1

Protected by copyright. Copying for private or commercial purposes, in part or in whole, is not permitted unless authorised by Volkswagen AG. Volkswagen AG does not guarantee or accept any liability with respect to the correctness of information in this document. Copyright by Volkswagen AG.
satelettronica

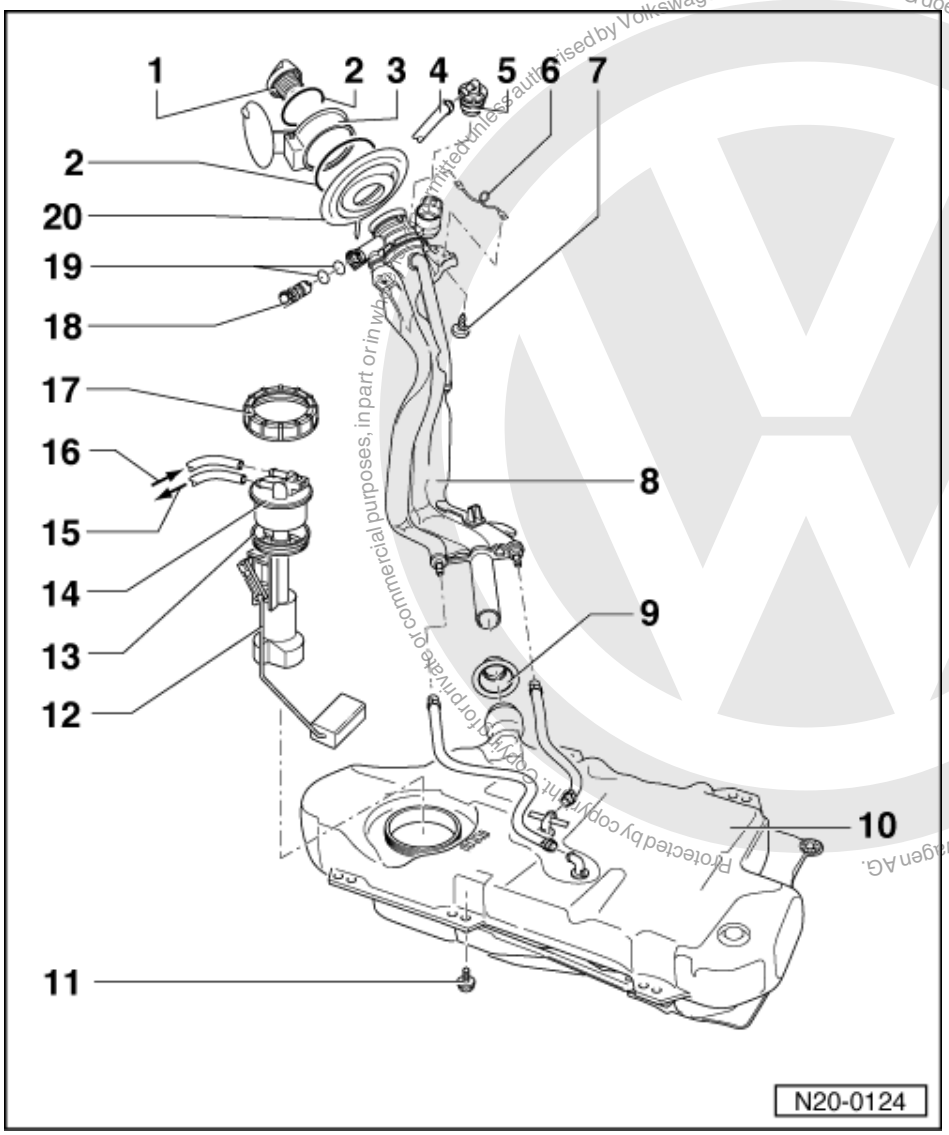

15 Supply line
- Black

16 Return line
- Blue

17 Union nut
- Remove and install with ring nut spanner 3217

18 Vent valve
- Checking =>Fig. 2
- To remove pull locking latch lightly to inside -arrow- and pull valve out

19 O-ring
- Renew if damaged

20 Cup
- For filler pipes

Protected by copyright. Copyright for private or commercial purposes, in part or in whole, is not permitted unless authorised by Volkswagen AG. Volkswagen AG does not guarantee or accept any liability with respect to the correctness of information in this document. Copyright by Volkswagen AG.
satelettronica

1.3 - Removing and installing fuel tank with its attachments, Caddy

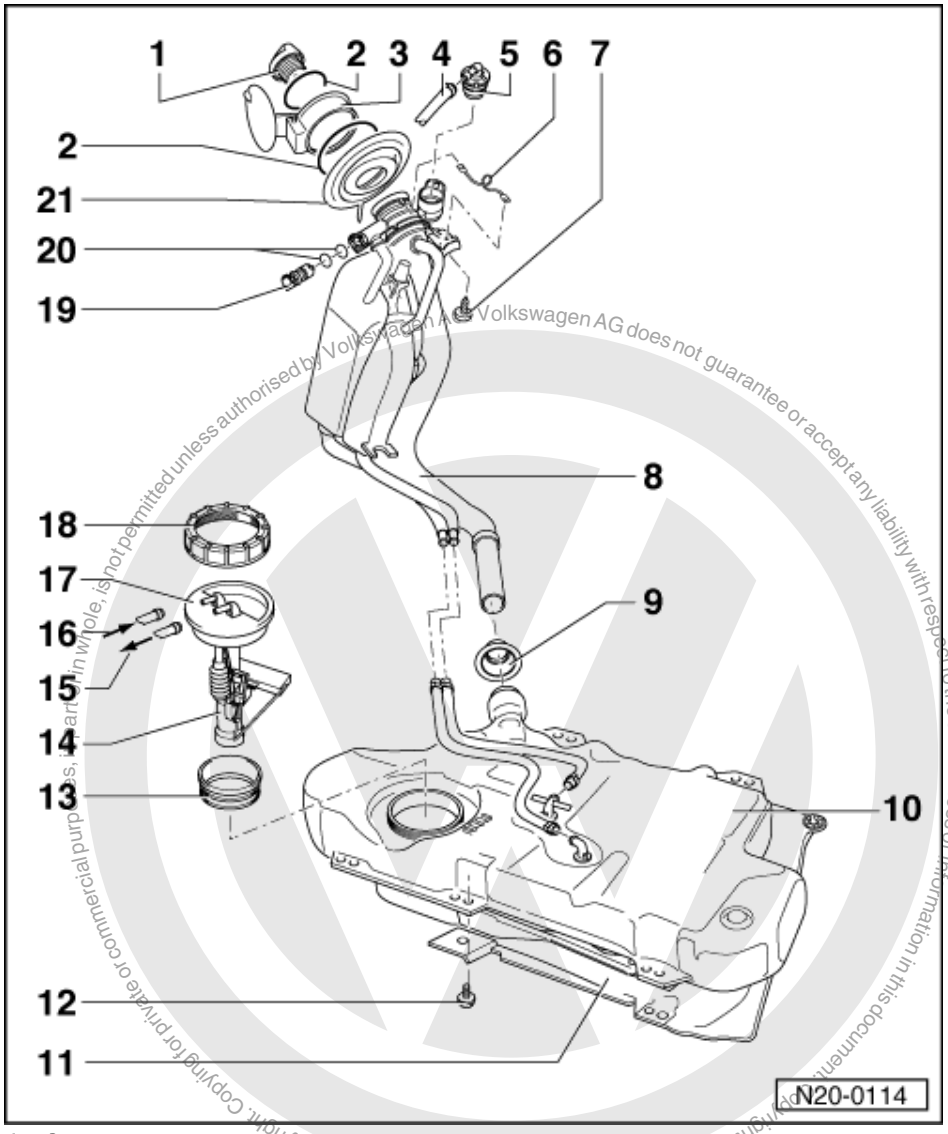

Protected by copyright. Copying for private or commercial purposes, in part or in whole, is not permitted unless authorised by Volkswagen AG. Volkswagen AG does not guarantee or accept any liability with respect to the correctness of information in this document. Copyright by Volkswagen AG.

1 Cap
2 Retaining ring
3 Tank flap unit
- Removing and installing

=> General body repairs; Repair group 55; fuel flap unit fuel flap unit

4 Vent pipe
5 Gravity/overflow valve
- To remove, release locking lug and unclip valve upwards out of filler neck
- Check valve for through-flow
  valve vertical: open,
  valve tilted 90 °: closed

6 Earth connection

satelettronica

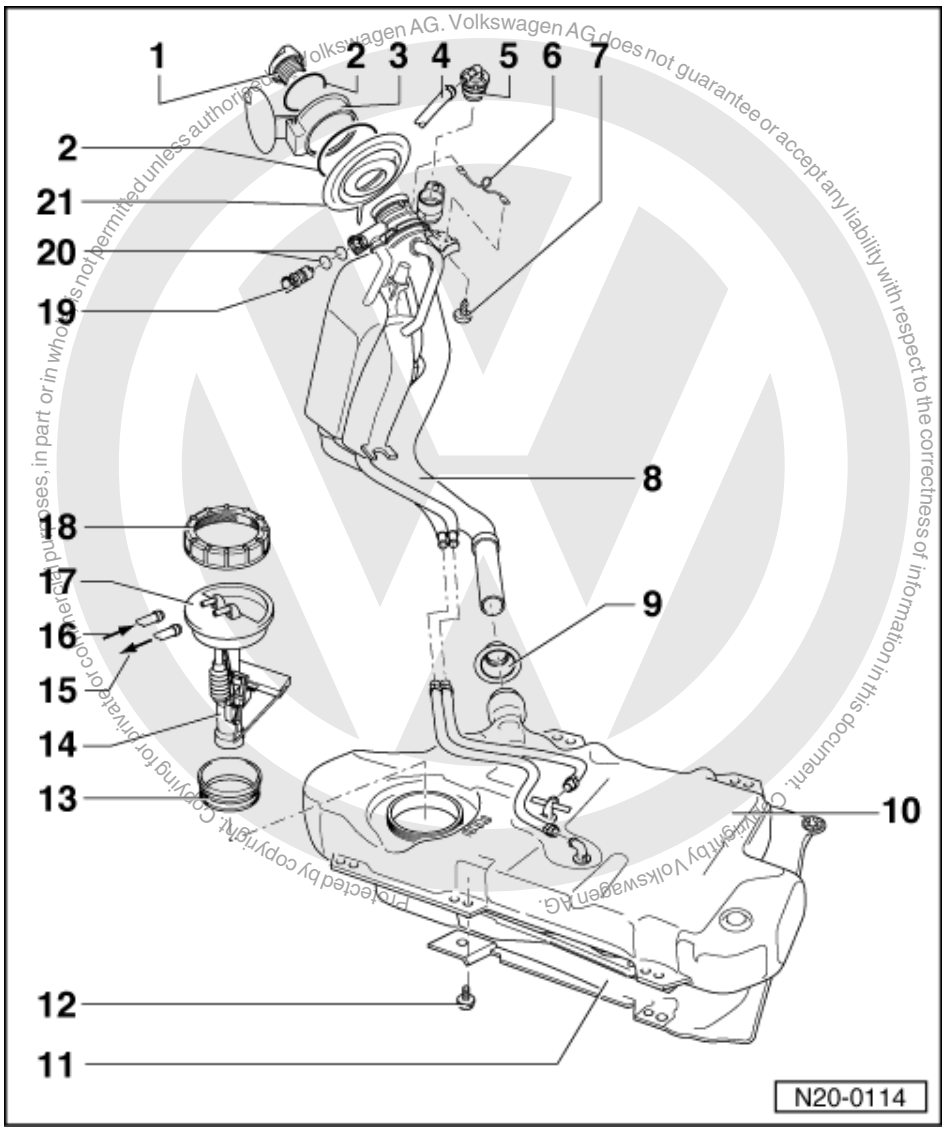

7 4 Nm
8 Filler neck
- With non-return valve

9 Sealing boot
- After installing filler pipes fit over fuel tank connections, having turned boot inside out

10 Fuel tank
- Removing and installing
  => Page 117

11 Heat shield
- Press clamping washer from heat shield tightly onto pins on vehicle floor

12 25 Nm
13 Sealing ring
- Coat with fuel when installing
- Renew if damaged

satelettronica

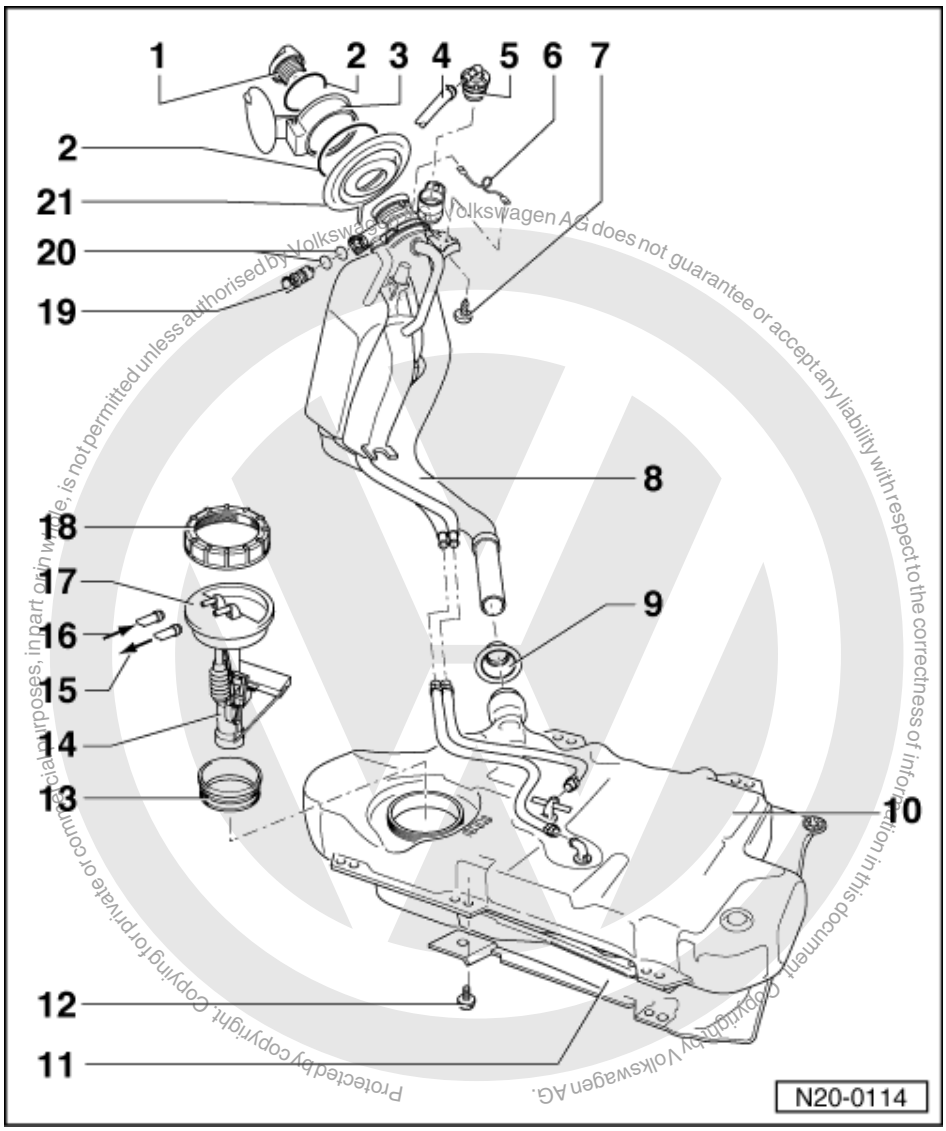

Protected by copyright. Copying for private or commercial purposes, in part or in whole, is not permitted unless authorised by Volkswagen AG. Volkswagen AG does not guarantee or accept any liability with respect to the correctness of information in this document. Copyright by Volkswagen AG.

14 Fuel gauge sender

- Note fitting position on fuel tank => Fig. 1
- Sender with strainer telescopic to upper part

15 Supply line

- Black

16 Return line

- Blue

17 Flange

- Note fitting position on fuel tank => Fig. 1

18 Union nut

- Remove and install with ring nut spanner 3217

19 Vent valve

- Checking =>Fig. 2
- To remove pull locking latch lightly to inside -arrow- and pull valve out

satelettronica

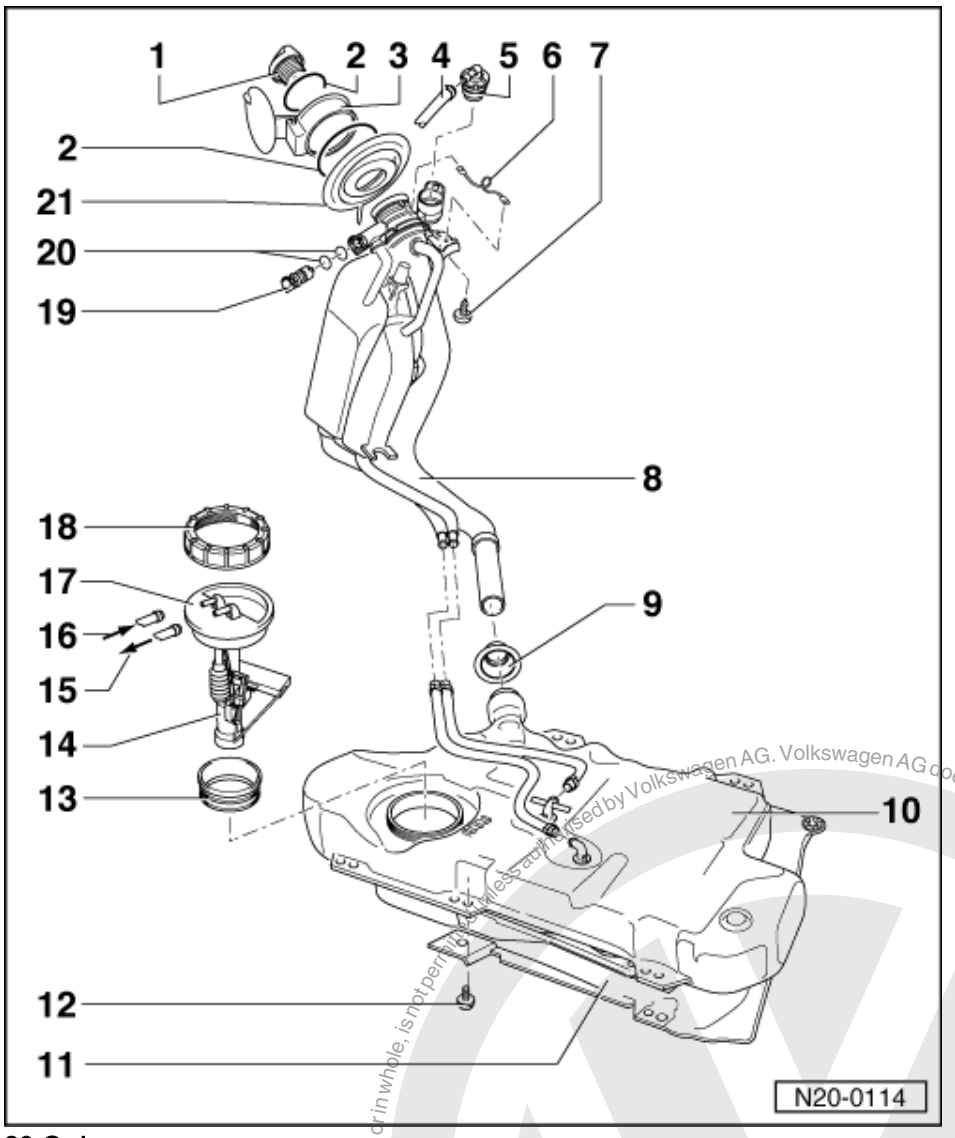

20 O-ring
- Renew if damaged

21 Cup
- For filler pipes

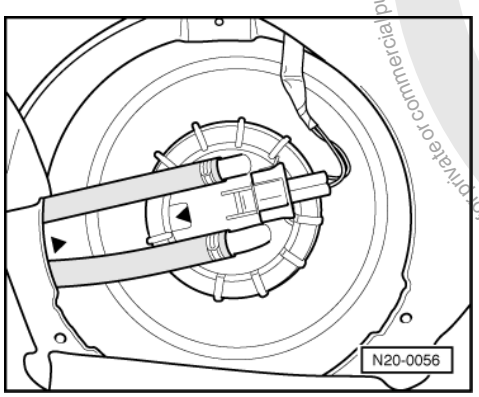

Protected by copyright. Copying for private or commercial purposes, in part or in whole, is not permitted unless authorised by Volkswagen AG. Volkswagen AG does not guarantee or accept any liability with respect to the correctness of information in this document. Copyright by Volkswagen AG.
satelettronica

-> Fig. 1 Installation position of fuel gauge sender

Marking on the flange must align with marking on the fuel tank.

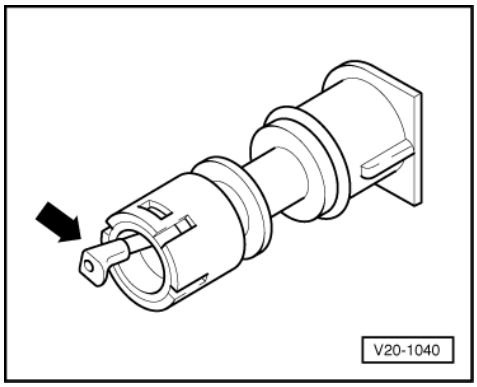

-> Fig. 2 Checking vent valve

Lever in rest position: Closed

Lever pushed in direction of arrow: Open

Protected by copyright. Copying for private or commercial purposes, in part or in whole, is not permitted unless authorised by Volkswagen AG. Volkswagen AG does not guarantee or accept any liability with respect to the correctness of information in this document. Copyright by Volkswagen AG.
satelettronica

1.4 - Servicing fuel filter

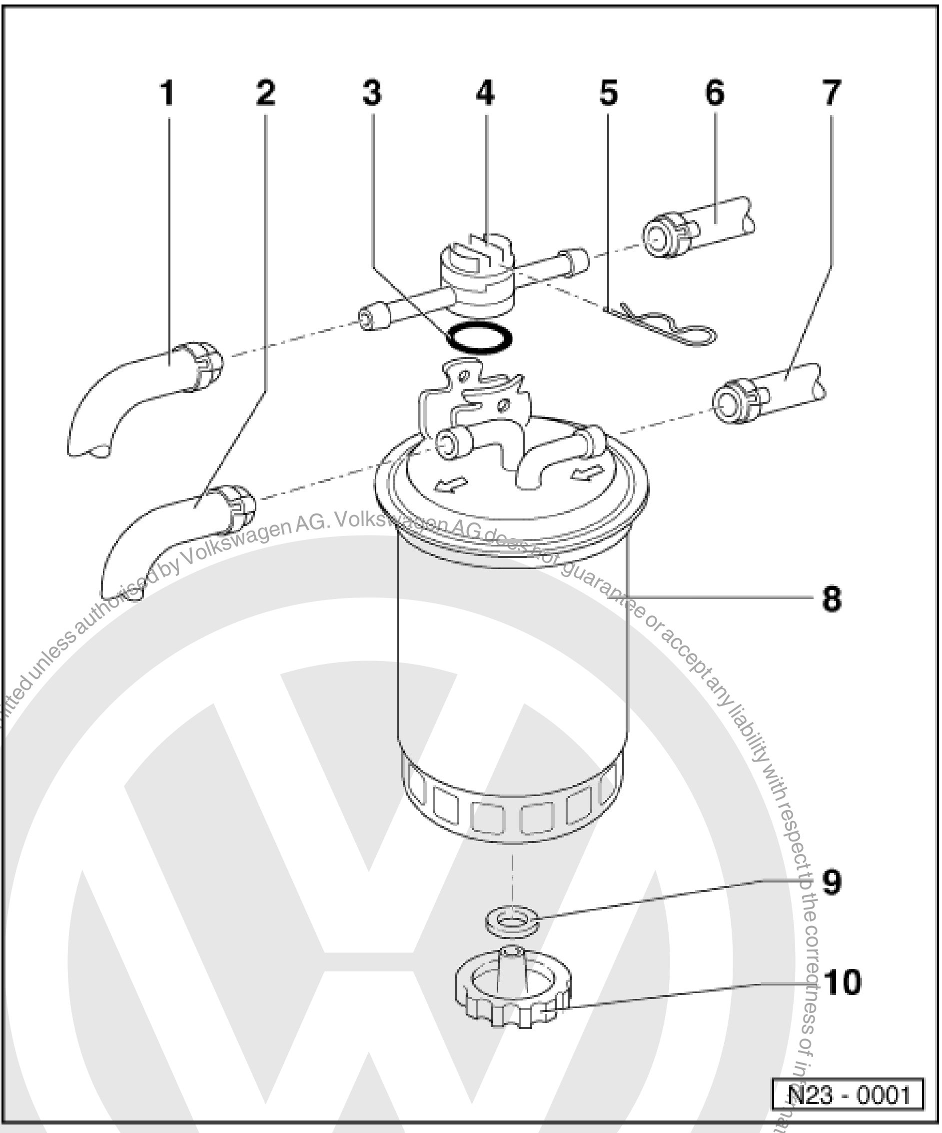

Protected by copyright. Copying for private or commercial purposes, in part or in whole, is not permitted unless authorised by Volkswagen AG. Volkswagen AG does not guarantee or accept any liability with respect to the correctness of information in this document. Copyright by Volkswagen AG.

1 **Return pipe**
- From injection pump

2 **Supply line**
- To injection pump

3 **O-ring**
- Renew

4 **Control valve**
- Installation position: arrow points towards fuel tank
- When changing filter, remove securing clip and take control valve off complete with fuel pipes
- Below + 15 °C:
  Passageway to filter open
- Over + 31 °C:
  Passageway to filter closed

5 **Securing clip**

6 **Return line**
- To fuel tank

satelettronica

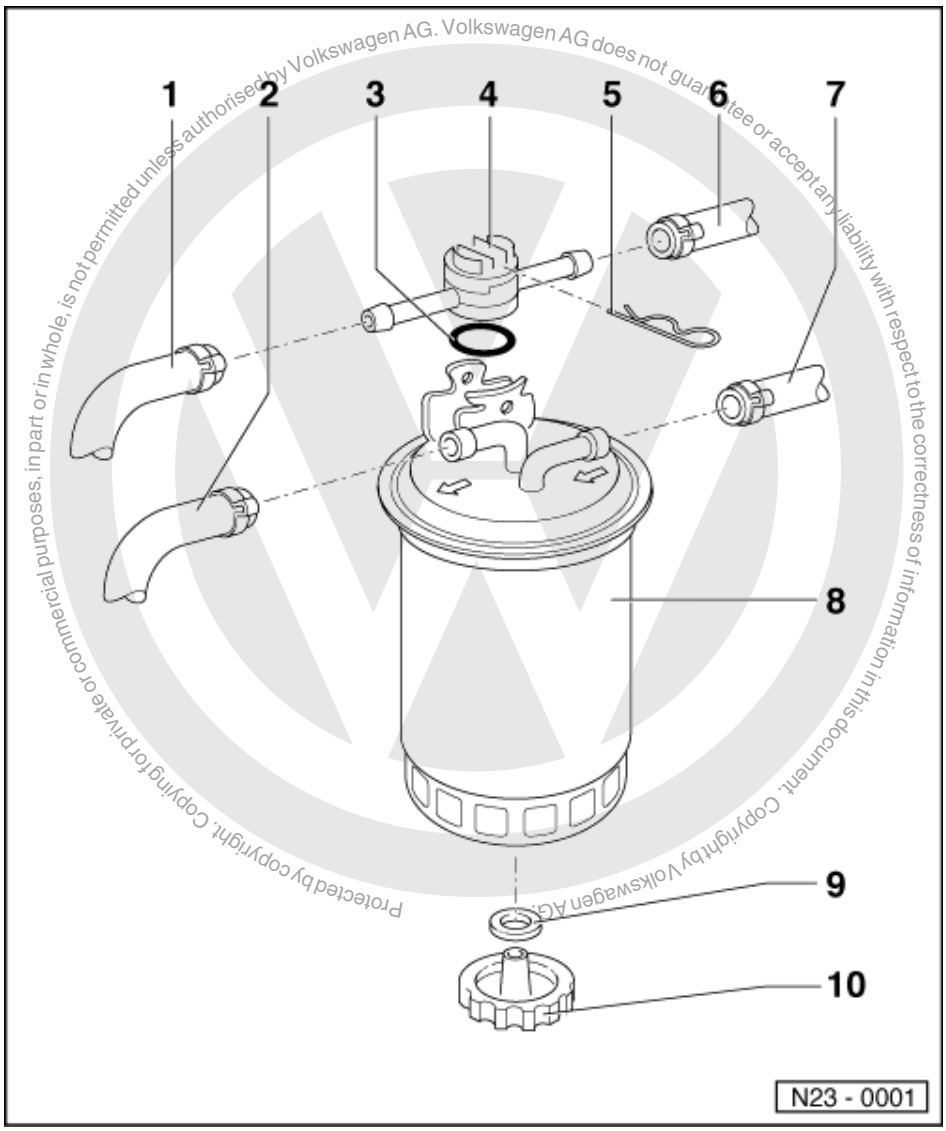

Protected by copyright. Copying for private or commercial purposes, in part or in whole, is not permitted unless authorised by Volkswagen AG. Volkswagen AG does not guarantee or accept any liability with respect to the correctness of information in this document. Copyright by Volkswagen AG.

7 Supply line
- From fuel tank

8 Fuel filter
- Location: in front right wheel housing below air cleaner
- To change air cleaner remove air cleaner housing complete.
- Pull out fuel filter upwards
- Fill with diesel before installing
- Flow direction is marked by an arrow
- Do not interchange connections
- Renew if damaged

9 Gasket
- Renew if damaged

10 Water drain plug
- To bleed remove securing clip and take control valve off complete with fuel pipes attached
- Loosen and allow approx. 100 cm3 fluid to drain

satelettronica

1.5 - Safety precautions when working on the fuel supply system

When removing and installing the fuel gauge sender from a full or partly full fuel tank the following must be observed:

- Before commencing work, switch on exhaust extraction system and place an extraction hose close to the sender opening in the fuel tank to extract escaping fuel fumes.
  If no exhaust extraction system is available, a radial fan (as long as motor is not in air flow) with a displacement greater than 15 m3/h can be used.
- Prevent skin contact with fuel! Wear fuel-resistant gloves!

1.6 - Rules for cleanliness

When working on the fuel supply/injection system, pay careful attention to the following "6 rules":

- Thoroughly clean all unions and the adjacent areas before disconnecting.
- Place parts that have been removed on a clean surface and cover. Do not use fluffy cloths!
- Carefully cover opened components or seal, if the repair cannot be carried out immediately.
- Only install clean components:
  Only unpack replacement parts immediately prior to installation.
  Do not use parts that have been stored loose (e.g. in tool boxes etc.).
- When the system is open:
  Do not work with compressed air if this can be avoided.
  Do not move vehicle unless absolutely necessary.
- Also ensure that no diesel fuel runs onto the coolant hoses. Hoses coming in contact with fuel must be cleaned immediately. Damaged hoses must be replaced.

1.7 - Removing and installing fuel tank

Note:
Check whether a coded radio is installed as during the forthcoming work sequences the battery earth strap must be disconnected. Obtain radio code first if necessary.

Removing

- With ignition switched off disconnect battery earth strap.

Caddy Van:

- Lift front, right load area floor covering.
- Now remove the right-hand load area floor piece.

=> General body repairs; Repair group 70; Removing and installing load compartment floor panel (Caddy)
Removing and installing load compartment floor panel (Caddy)

- Remove floor cover.

Caddy Kombi, Polo Classic, Polo Estate:

- Fold rear seat bench forwards.
- Remove floor cover.

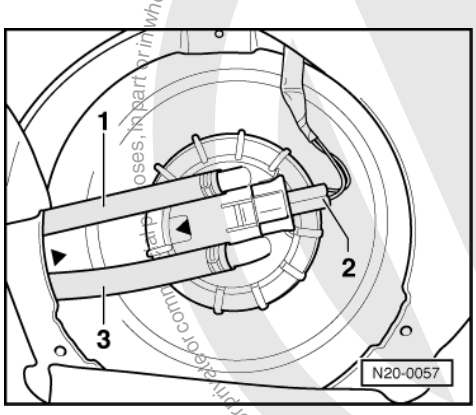

Protected by copyright. Copying for private or commercial purposes, in part or in whole, is not permitted unless authorised by Volkswagen AG. Volkswagen AG does not guarantee or accept any liability with respect to the correctness of information in this document. Copyright by Volkswagen AG.

satelettronica

When the floor cover is removed:

- -> Pull fuel return hose -1- (blue) and connector -2- off at flange.
- Pull off fuel supply pipe -3-.
- Drain fuel tank.

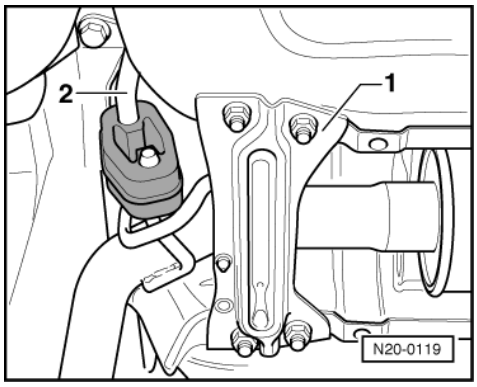

- -> Remove rear connecting support -1-.
- Remove all rear exhaust system mountings -2- from body and secure the slightly lowered exhaust system with wire to body.
- Remove rear right wheel.
- Unbolt filler neck from body.
- Take filler cap off filler neck and unclip neck from cup.

Polo Classic, Polo Estate:

- Pull off breather hoses at filler neck.
- Remove clamping disc for fuel tank heat shield.
- Unbolt fuel tank from body and lower tank slightly using gearbox jack.
- Remove filler neck.
- Take out fuel tank together with heat shield.

Caddy:

- Remove shock absorber upper securing nut and push securing bolt out inwards approx. 2 cm (Do not remove shock absorber).
- Remove heat shield on fuel tank.
- Take out fuel tank, when doing this guide fuel filler neck out between shock absorber and spring (turn fuel tank through 90°).

Installing

Install in reverse order but note following:

- Breather and fuel hoses are to be installed kink-free.
- Secure fuel hoses with screw-type clamps.
- Do not interchange supply and return hose (return hose blue or blue markings, supply hose black).

Protected by copyright. Copying for private or commercial purposes, in part or in whole, is not permitted unless authorised by Volkswagen AG. Volkswagen AG does not guarantee or accept any liability with respect to the correctness of information in this document. Copyright by Volkswagen AG.

satelettronica

1.8 - Servicing accelerator mechanism

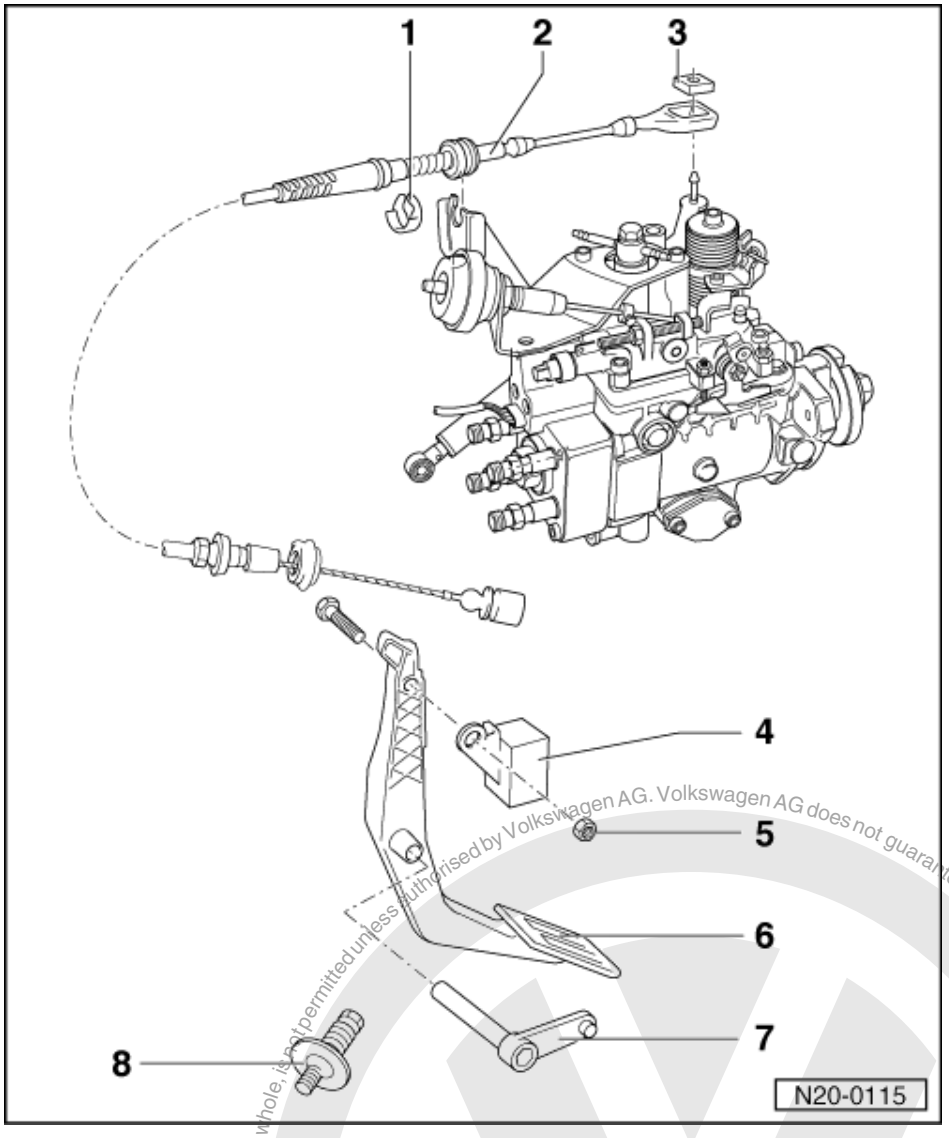

Engine code 1Y

Engine codes AEY, AHB, AHU, AKW, ALE

=> Page 121

Engine code AFN => Page 122

1 **Securing clip**
2 **Accelerator cable**
- Adjust by moving position of securing clip (retainer) on outer cable grooves => Page 120 , Fig. 1

3 **Rubber securing piece**
4 **Balance weight**
5 **10 Nm**
6 **Accelerator pedal**
- Removing and installing =>Page 120 , Fig. 2

7 **Accelerator pedal pin**
8 **Accelerator pedal stop**

Protected by copyright. Copying for private or commercial purposes, in part or in whole, is not permitted unless authorised by Volkswagen AG. Volkswagen AG does not guarantee or accept any liability with respect to the correctness of information in this document. Copyright by Volkswagen AG.
satelettronica

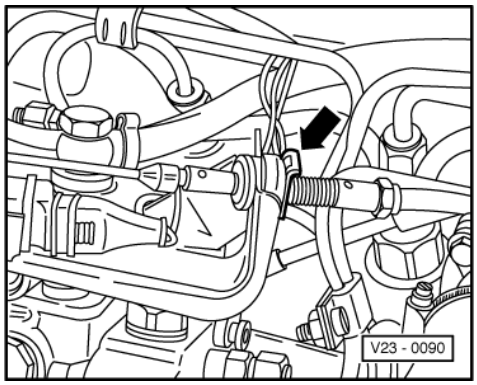

-> Fig. 1 Adjusting accelerator cable

With the accelerator cable in full throttle position, adjust cable by positioning the securing clip -arrow- in the outer cable grooves, so that the injection pump lever just contacts the stop and is not under stress.

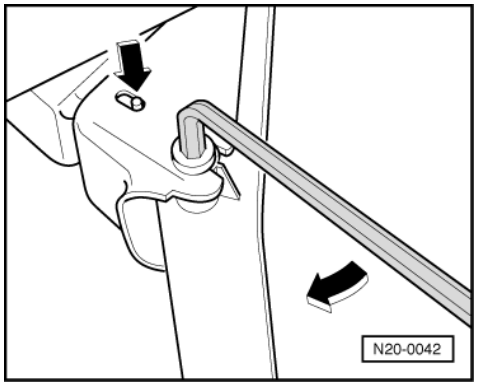

-> Fig. 2 Removing and installing accelerator pedal

To remove the accelerator pedal, press the accelerator pedal shaft locking device carefully out of the drilling -arrow-, then turn the shaft with a 6 mm hexagon key until it can be pulled out.

Protected by copyright. Copy for private or commercial purposes, in part or in whole, is not permitted unless authorised by Volkswagen AG. Volkswagen AG does not guarantee or accept any liability with respect to the correctness of information in this document. Copyright by Volkswagen AG.
satelitnica

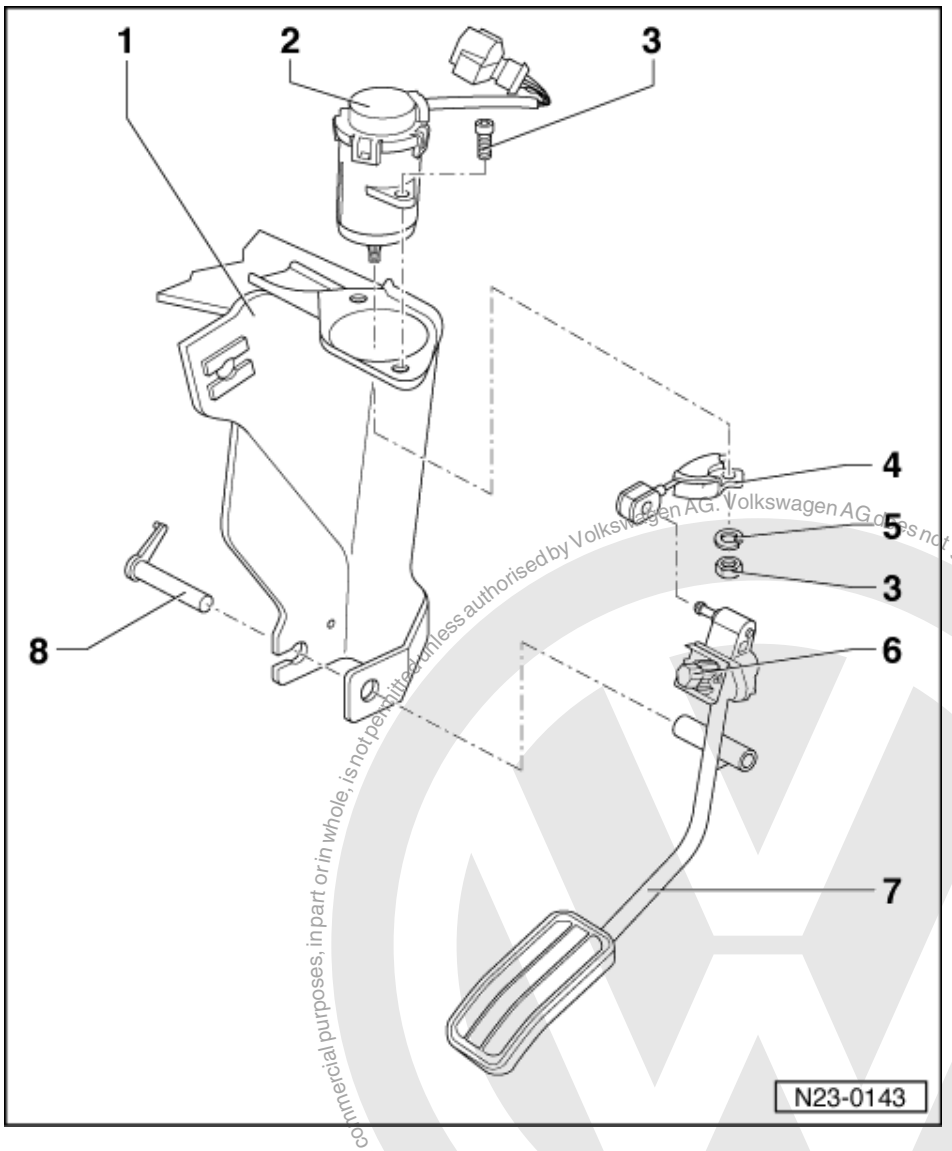

Engine codes AEY, AHB, AHU, AKW, ALE

1 Bracket
2 Accelerator pedal position sender (G79)
- Checking =>Page 124
- Adjusting =>Page 127

3 10 Nm
4 Cable cam
- Installing
  =>Page 123 , Fig. 2

5 Spring washer
6 Adjustment bolt
7 Accelerator pedal
- Removing and installing
  =>Page 124 , Fig. 3

8 Accelerator pedal

Protected by copyright. Copying for private or commercial purposes, in part or in whole, is not permitted unless authorised by Volkswagen AG. Volkswagen AG does not guarantee or accept any liability with respect to the correctness of information in this document. Copyright by Volkswagen AG.
satelettronica

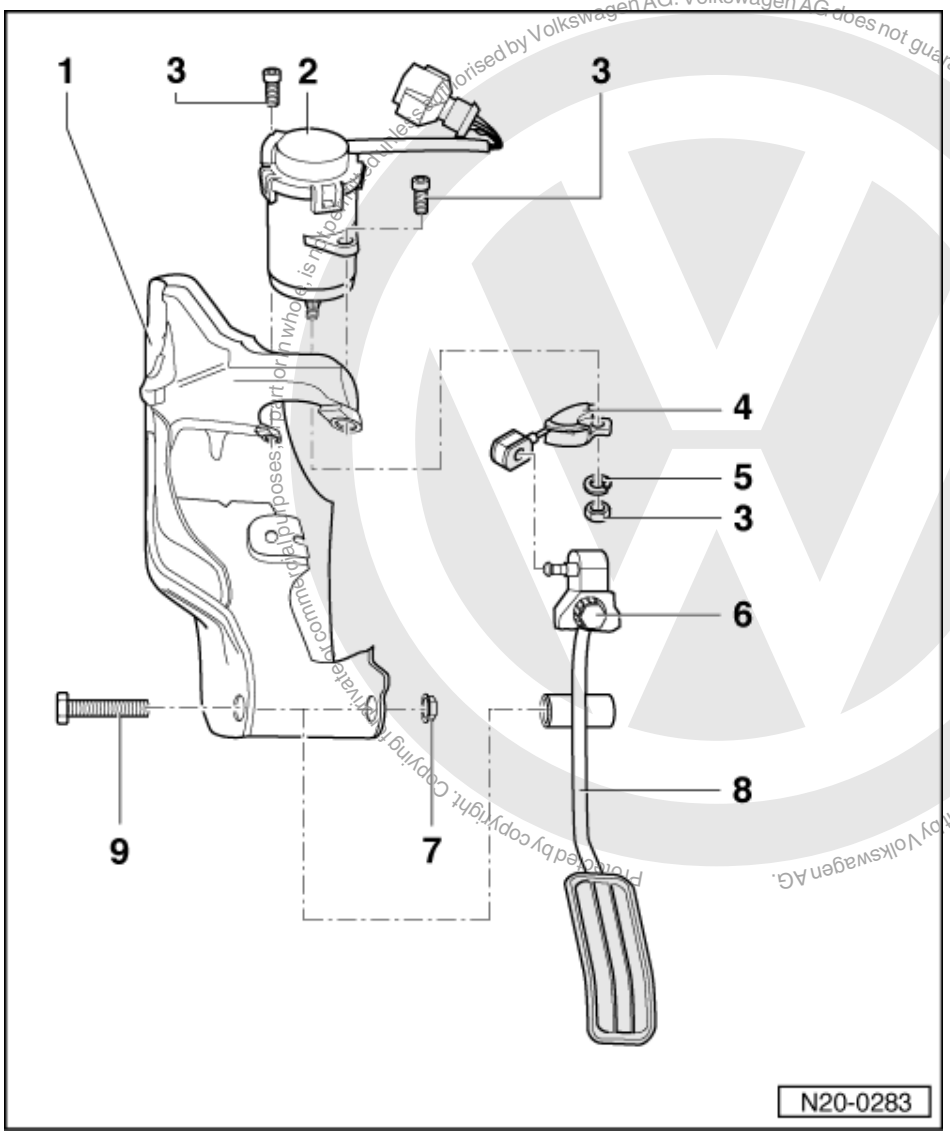

Produced by copyright. Copying for private or commercial purposes, in part or in whole, is not permitted unless authorised by Volkswagen AG. Volkswagen AG does not guarantee or accept any liability with respect to the correctness of information in this document. Copyright by Volkswagen AG.

satelettronica

Engine code AFN

1 Bracket
2 Accelerator pedal position sender (G79)
- Checking =>Page 124
- Adjusting =>Page 127

3 10 Nm
4 Cable cam
- Installing
  =>Page 123 , Fig. 2

5 Spring washer
6 Adjustment bolt
7 20 Nm
8 Accelerator pedal
9 Hexagon bolt M8

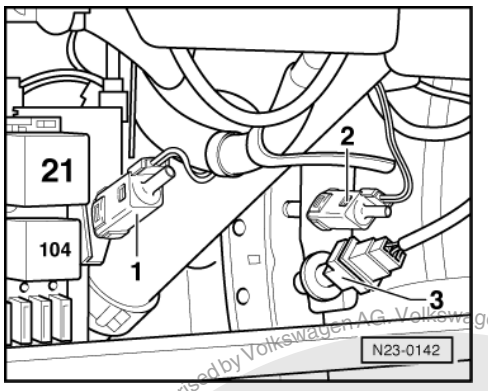

-> Fig. 1 Switches in footwell

1 - Clutch pedal switch
2 - Brake pedal switch
3 - Brake light switch

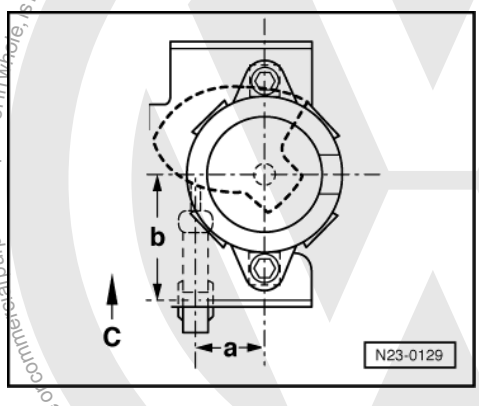

-> Fig.2 Installing cable cam

- Secure cable cam to sender so that the dimensions shown are adhered to when facing forwards.
  a = 22 ±0.05 mm
  b = 41±0.05 mm
  c = Forwards

Note:

The cable cam eye must be parallel to the forward direction.

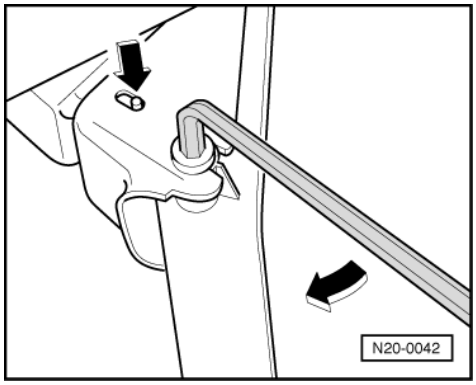

Copyright by Volkswagen AG. Volkswagen AG does not guarantee or accept any liability with respect to the correctness of information in this document. Protected by copyright. Copying for private or commercial purposes, in part or in whole, is not permitted unless authorised by Volkswagen AG.
satelettronica

-> Fig. 3 Removing and installing accelerator pedal

To remove the accelerator pedal, press the accelerator pedal shaft locking device carefully out of the drilling -arrow-, then turn the shaft with a 6 mm hexagon key until it can be pulled out.

1.9 - Checking accelerator position sender

Engine codes AEY, AFN, AHB, AHU, AKW, ALE

The accelerator pedal position sender is located on accelerator pedal and passes driver's requirement (pedal position) on further to the control unit.

Special tools, workshop equipment, testers, measuring instruments and auxiliary items required

- Fault reader V.A.G 1551 or vehicle system tester V.A.G 1552 with cable V.A.G 1551/3
- Test box V.A.G 1598/18 or V.A.G 1598/22
- Hand multimeter V.A.G 1526 or multimeter V.A.G 1715
- Adapter set V.A.G 1594
- Current flow diagram

Test sequence

- Connect fault reader V.A.G 1551 (V.A.G 1552) and with ignition switched on select engine electronics control unit with the "Address word" 01:

=> Repair group 01; Self-diagnosis; Connecting fault reader V.A.G 1551 and selecting engine electronics control unit Self-diagnosis Connecting fault reader V.A.G 1551 and selecting engine electronics control unit

-> Indicated on display:

```
Rapid data transfer     HELP
Select function XXX
```

- Press keys 0 and 8 for the function "Read measured value block" and confirm entry with Q key.

-> Indicated on display:

```
Read measured value block     HELP
Input display group number XXX
```

- Press keys 0, 0 and 2 for "Display group number 2" and confirm entry with Q key.

```
Read measured value block 2
0 rpm     0.0 %     0     1     0          18.4
5C
```

-> Check accelerator pedal position display in display zone 2. The accelerator pedal must not be depressed.
Specification: 0.0 %

- Check additionally the idling speed switch display in display zone 3. The centre position must show 1.
Display: 010

```
Read measured value block 2
0 rpm     100 %     0     0     0          18.4
5C
```

-> Depress accelerator pedal slowly until fully down, and observe display zones 2 and 3.

- Display zone 2:
The accelerator pedal position figure must increase continuously.
Specification at full throttle position: 100 %
- Display zone 3:
The centre position must change to 0.
Display: 000

End specification value not achieved:

satelettronica
Protected by copyright. Copying for private or commercial purposes, in part or in whole, is not permitted unless authorised by Volkswagen AG. Volkswagen AG does not guarantee or accept any liability with respect to the correctness of information in this document. Copyright by Volkswagen AG.

- Press the ⇒key.
- Press keys 0 and 6 for the "End data transfer" function and confirm input with the Q key.
- Switch off ignition.
- Adjust accelerator pedal position sender
  =>Page 127

Display does not change or is erratic:

- Check accelerator pedal position sender as follows:
- Press the ⇒key.
- Press keys 0 and 6 for the "End data transfer" function and confirm input with the Q key.
- Switch off ignition.

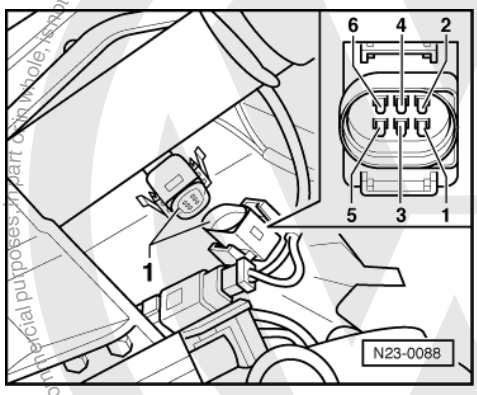

- -> Disconnect connector for accelerator pedal position sender -1-.
- Measure sender resistance between connector contacts 1+3.
  Specification:
  Accelerator pedal in idling speed position: 1.0...1.5 kω
  Accelerator pedal in full throttle position: 1.5...2.5 kω
- Check idling speed switch (F60) in accelerator pedal position sender. To do this measure resistance between connector contacts 4+6.
  Specification:
  Accelerator pedal in idling speed position: max.1.5 kω
  Accelerator pedal depressed: ∞ ω

If the specifications are not obtained:

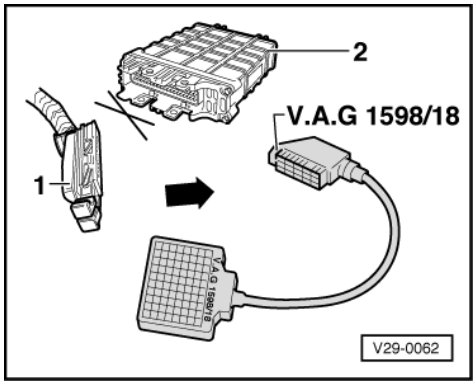

- Replace accelerator pedal position sender (G79)
  =>Page 121 , item 2 .

If the specifications are obtained:

Vehicles with 68-pin control unit

- -> Connect test box V.A.G 1598/18 to control unit wiring loom.

satelettronica

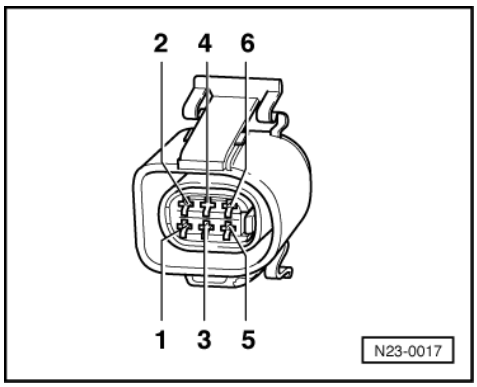

- -> Check wiring between test box and connector for open circuit according to current flow diagram.
  Contact 1+ socket 15
  Contact 2+ socket 57
  Contact 3+ socket 55
  Contact 4+ socket 65
  Contact 5+ socket 62
  Contact 6+ socket 33
  Wire resistance: max. 1.5 ω
- Additionally check wires for short to one another, to vehicle earth and to battery positive.
  Specification: ∞ω

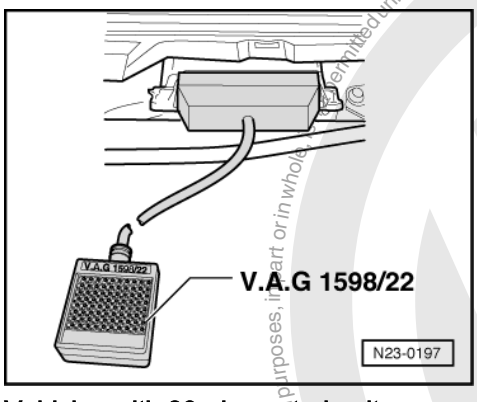

Vehicles with 80-pin control unit

- -> Connect test box V.A.G 1598/22 to control unit wiring harness.

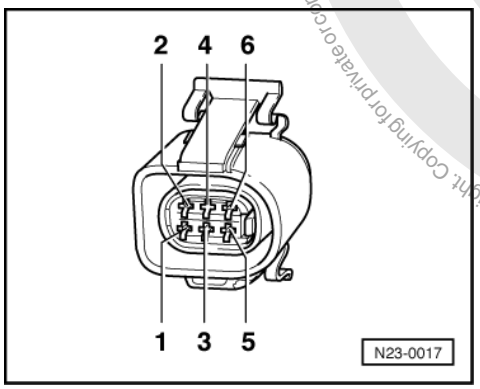

- -> Check wiring between test box and connector for open circuit according to current flow diagram.
  Contact 1+ socket 24
  Contact 2+ socket 11
  Contact 3+ socket 23
  Contact 4+ socket 12
  Contact 5+ socket 8
  Contact 6+ socket 25
  Wire resistance: max. 1.5 ω
- Additionally check wires for short to one another, to vehicle earth and to battery positive.

Protected by copyright. Copying for private or commercial purposes, in part or in whole, is not permitted unless authorised by Volkswagen AG. Volkswagen AG does not guarantee or accept any liability with respect to the correctness of information in this document. Copyright by Volkswagen AG.
satelettronica

Specification: ∞ω

Continuation for all vehicles

If no fault is detected in the wiring:

- Renew Diesel direct injection system control unit (J248)

=> Repair group 23; Renewing engine control unit, coding and matching; Renewing engine control unit Renewing engine control unit, coding and matching Renewing engine control unit

1.10 - Adjusting pedal position sender

Engine codes AEY, AFN, AHB, AHU, AKW, ALE

Special tools, workshop equipment, testers, measuring instruments and auxiliary items required

◆ Fault reader V.A.G 1551 or vehicle system tester V.A.G 1552 with cable V.A.G 1551/3

Work sequence

- Connect fault reader V.A.G 1551 (V.A.G 1552) and with ignition switched on select engine electronics control unit with the "Address word" 01:

=> Repair group 01; Self-diagnosis; Connecting fault reader V.A.G 1551 and selecting engine electronics control unit Self-diagnosis Connecting fault reader V.A.G 1551 and selecting engine electronics control unit

-> Indicated on display:

```
Rapid data transfer      HELP
Select function XXX
```

- Press keys 0 and 8 for the function "Read measured value block" and confirm entry with Q key.

-> Indicated on display:

```
Read measured value block     HELP
Input display group number XXX
```

- Press keys 0, 0 and 2 for "Display group number 2" and confirm entry with Q key.

```
Read measured value block 2
0 rpm     0.0 %     0     1     0          18.4
5C
```

-> Check accelerator pedal position display in display zone 2. The accelerator pedal must not be depressed.
Specification: 0.0 %

```
Read measured value block 2
0 rpm     100 %     0     0     0          18.4
5C
```

-> Depress accelerator pedal slowly until fully down and observe display zone 2. The value for the accelerator pedal position must increase continuously and shortly before full throttle stop reach
100 %.

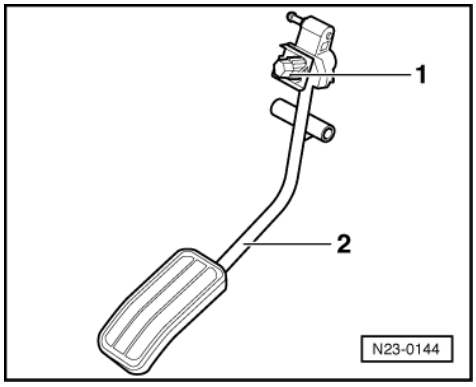

satelettronica

- -> If necessary adjust accelerator pedal -2- by turning the adjustment screw -1- so that when accelerator pedal is not depressed (idling position)
  0.0 %
  and with accelerator pedal depressed to just before full throttle position
  100 %
  is displayed.

Protected by copyright. Copying for private or commercial purposes, in part or in whole, is not permitted unless authorised by Volkswagen AG. Volkswagen AG does not guarantee or accept any liability with respect to the correctness of information in this document. Copyright by Volkswagen AG.

satelettronica

21 - Charging

1 - Charge air system with turbocharger

1.1 - Charge air system with turbocharger

1.2 - Safety precautions

Warning!
When doing any repair work, especially in the engine compartment, pay attention to the following due to the cramped conditions:

- **Route all the various lines (e.g. for fuel, hydraulics, activated charcoal filter system, coolant, refrigerant, brake fluid and vacuum pipes and hoses) and electrical wiring so that the original positions are restored.**
- **Ensure sufficient clearance to all moving or hot components.**

Observe following if test and measuring instruments are required during a test drive:

- Test and measuring instruments must be secured to rear seat and operated by a 2nd person from this location.

  If test and measuring instruments are operated from front passenger's seat and the vehicle is involved in an accident, there is a possibility that the person sitting in this seat may receive serious injuries when the airbag is triggered.

1.3 - Rules for cleanliness

When working on the exhaust gas turbocharger, pay careful attention to the following rules of cleanliness:

- Thoroughly clean all unions and the adjacent areas before disconnecting.
- Place parts that have been removed on a clean surface and cover. Do not use fluffy cloths!
- Carefully cover opened components or seal, if the repair cannot be carried out immediately.
- Only install clean components:
  Only unpack replacement parts immediately prior to installation.
  Do not use parts that have been stored loose (e.g. in tool boxes etc.).
- Existing transport and protective packaging and sealing caps must only be removed immediately prior to installation.
- When repairing remove oil from connection and hose ends.
- When the system is open:
  Do not work with compressed air if this can be avoided.
  Do not move vehicle unless absolutely necessary.

1.4 - Removing and installing turbocharger with attachments

Observe safety precautions=> Page 129 .

Observe rules for cleanliness => Page 129 .

satelettronica

Notes:

- All hose connections are secured with clamps and/or securing clips.

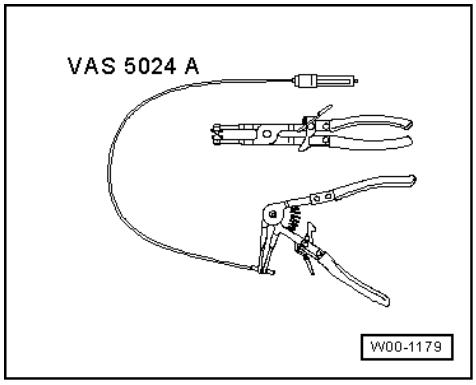

- VAS 5024 A pliers are recommended when installing spring-type clips.
- Do not install hose connections with lubricant containing oil.
- Charge air system must be free of leaks.
- Before screwing on oil supply pipe fill turbocharger at connection with engine oil.
- After installing turbocharger run engine for approx. 1 minute at idling speed, do not rev engine. This ensures that the turbocharger is adequately lubricated.
- Renew self-locking nuts.

Hose connections with connector couplings

Note:

All hose connections of charge air system are secured by spring-type clips or by connector couplings. Always check the following points with connector couplings:

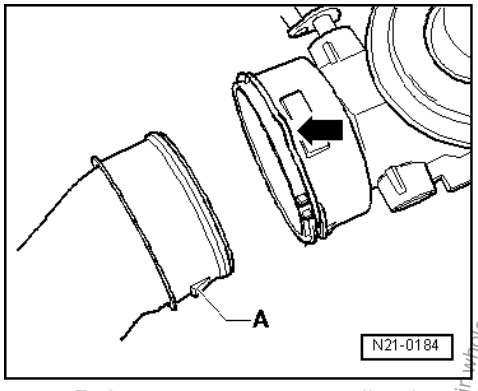

- -> Release connector coupling by pulling the securing clamp -arrow-.

  Separate hose/pipe without auxiliary tools.

- When assembling ensure that the retaining lugs -A- are engaged securely.

Engine codes AHU, ALE => Page 131

Engine code AFN =>Page 135

Turbocharger hose connections => Page 140 .

Protected by copyright. Copying for private or commercial purposes, in part or in whole, is not permitted unless authorised by Volkswagen AG. Volkswagen AG does not guarantee or accept any liability with respect to the correctness of information in this document. Copyright by Volkswagen AG.
satelettronica

Copyright by Volkswagen AG. Volkswagen AG does not guarantee or accept any liability with respect to the correctness of information in this document. Copyright by Volkswagen AG. Protected by copyright. Copying for private or commercial purposes, in part or in whole, is not permitted unless authorised by Volkswagen AG.

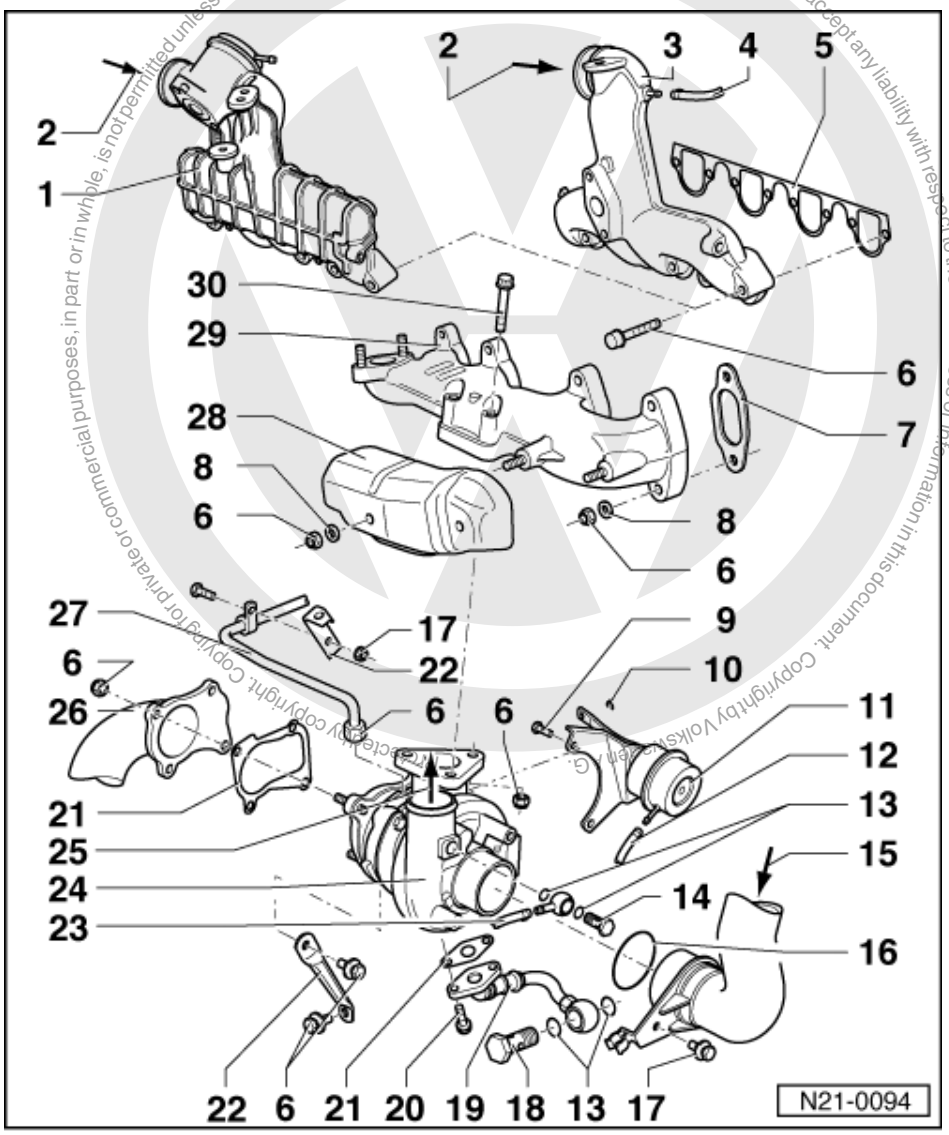

Engine codes AHU, ALE

1 Intake manifold
- Engine codes ALE

2 From charge air cooler

3 Intake manifold
- Engine code AHU

4 Hose
- Black
- To diesel direct injection system control unit (J248)

5 Gasket
- Renew
- Coating (beading) towards intake manifold

6 25 Nm

satelettronica

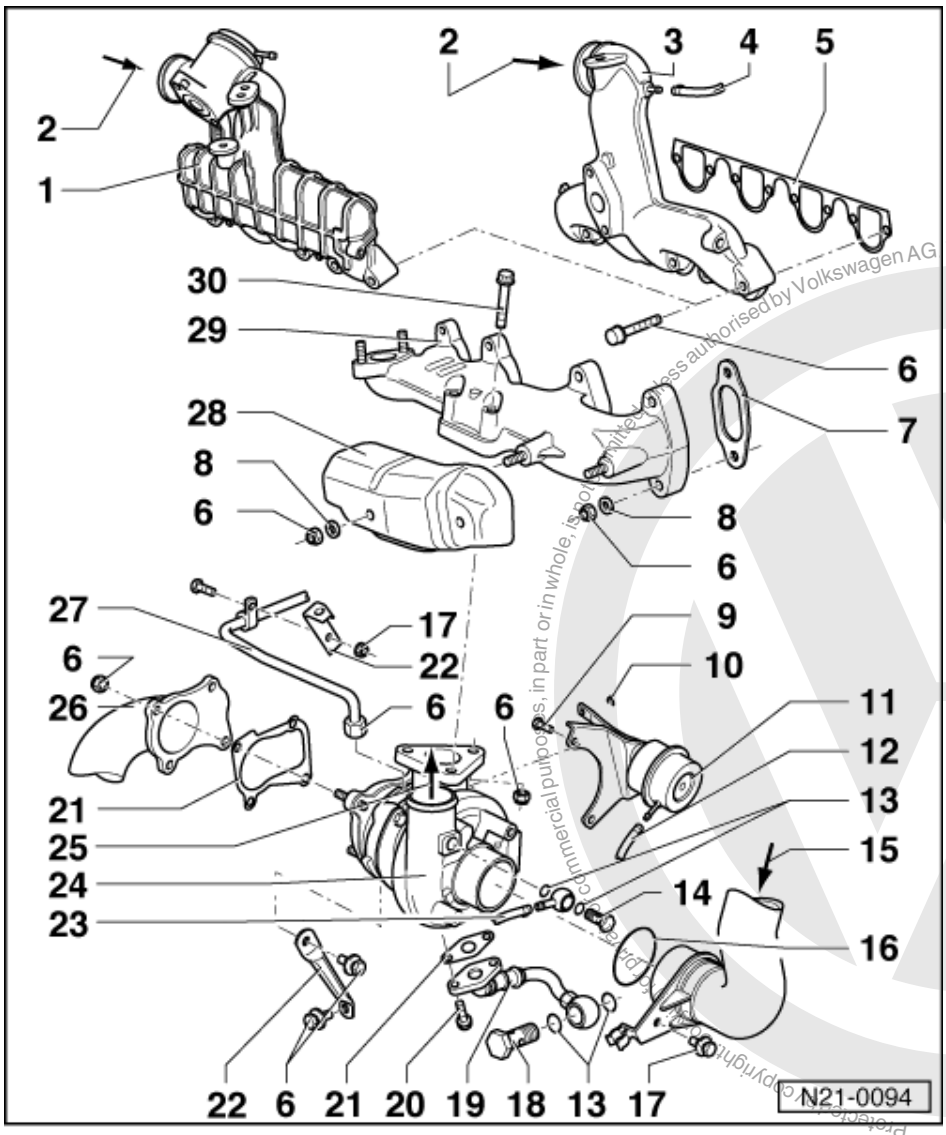

7 Gasket
- Note installation position

8 Washer

9 10 Nm
- Install with D6

10 Circlip

11 Pressure unit
- For charge pressure regulating valve
- Checking =>Page 148
- Removing and installing
  => Page 148

12 Hose
- Blue
- To charge pressure control solenoid valve (N75) => Page 140 , turbocharger hose connections

13 Seal
- Renew

satelettronica
Volkswagen AG does not guarantee or accept any liability with respect to the correctness of information in this document. Copyright by Volkswagen AG.

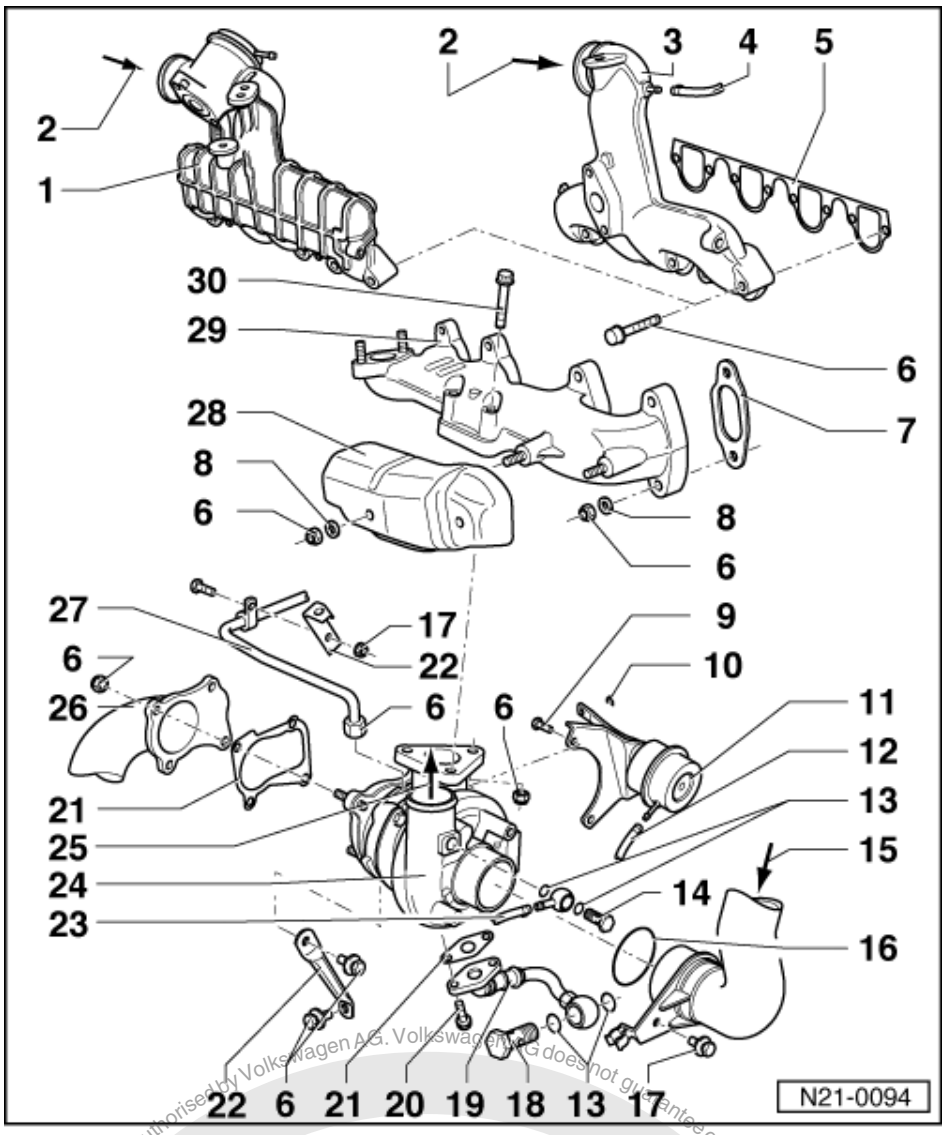

14 Banjo bolt, 15 Nm
15 From air cleaner
16 O-ring
- Renew if damaged

17 10 Nm
18 Banjo bolt, 30 Nm
19 Oil return pipe
- To cylinder block

20 20 Nm
21 Gasket
- Renew

22 Retainer
23 Hose
- Black
- To charge pressure control solenoid valve (N75) => Page 140 , turbocharger hose connections

satelettronica
Protected by copyright. Copyright. Copying for private or commercial purposes, in part or in whole, is not permitted unless authorised by Volkswagen AG. Volkswagen AG does not guarantee or accept any liability with respect to the correctness of information in this document. Copyright by Volkswagen AG.

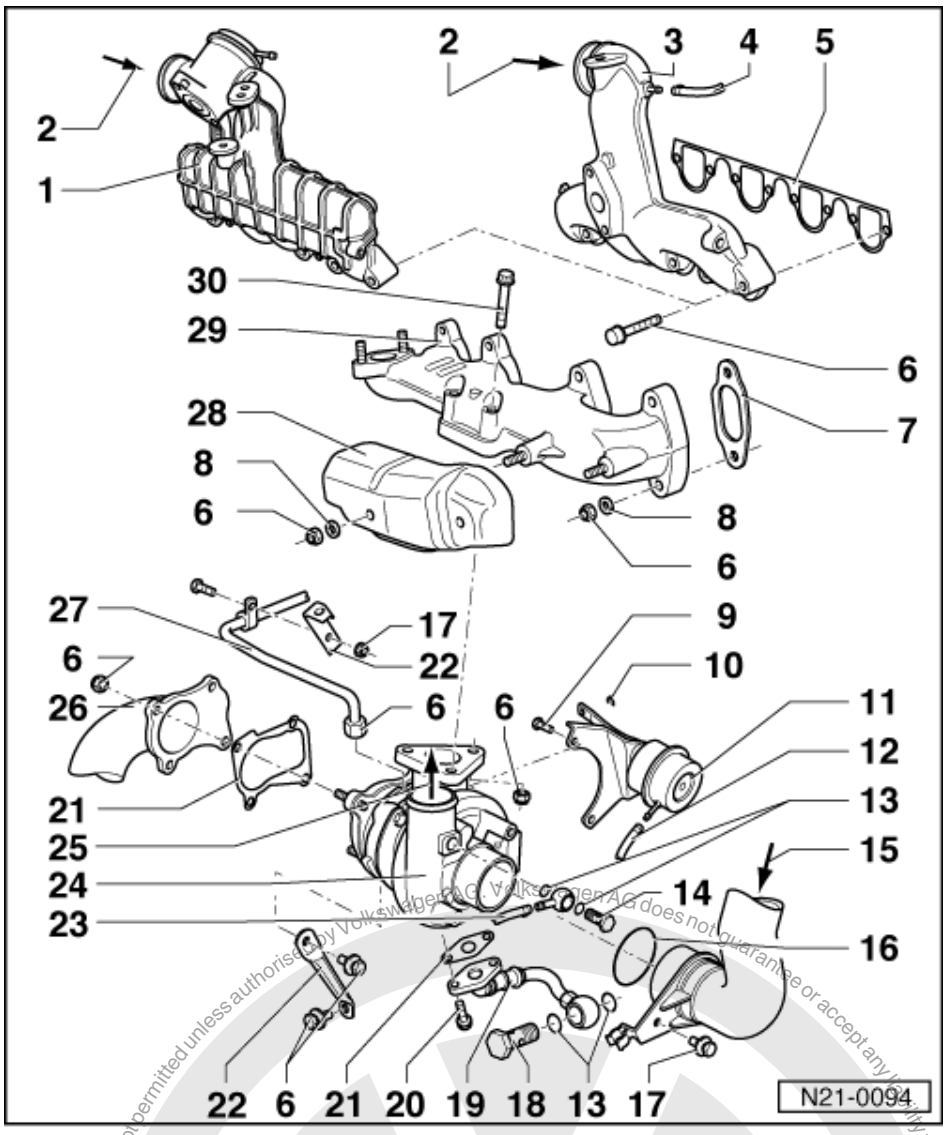

24 Turbocharger

- Removing and installing
  => Page 142
- Checking boost pressure
  => Page 146

25 To charge air cooler

26 Front exhaust pipe

27 Oil supply pipe

- From oil filter bracket
  => Page 81 , item 8
- Fill connection with engine oil before screwing on oil supply pipe.
- Removing and installing =>page 86

28 Heat shield

29 Exhaust manifold

30 35 Nm

- Renew
- Coat threads and bolt head seating surface with G000500

Protected by copyright. Copying for private or commercial purposes, in part or in whole, is not permitted unless authorised by Volkswagen AG. Volkswagen AG does not guarantee or accept any liability with respect to the correctness of information in this document. Copyright by Volkswagen AG.

satelettronica

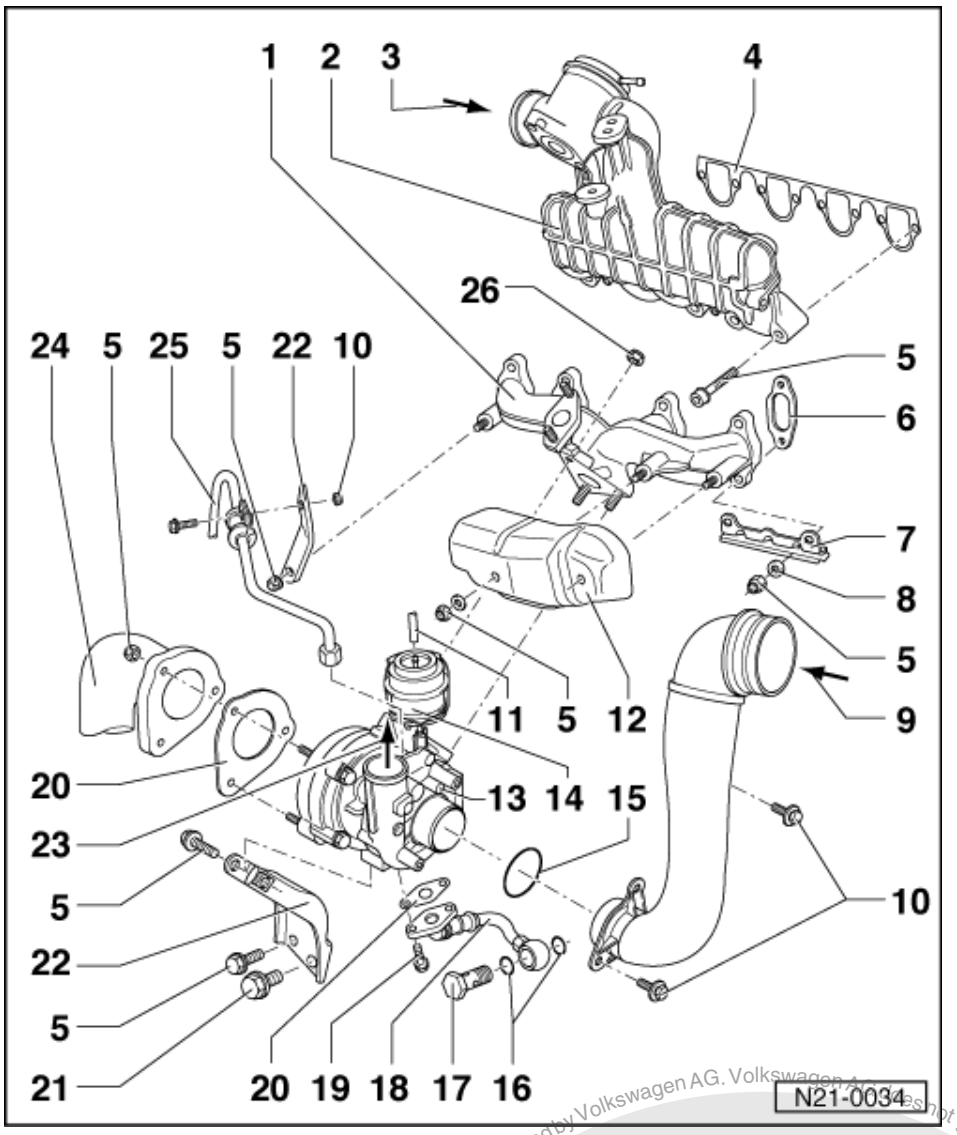

Engine code AFN

1 Exhaust manifold
2 Intake manifold
- With exhaust gas recirculation valve

3 From charge air cooler
4 Gasket
- Renew
- Coating (beading) towards intake manifold

5 25 Nm
6 Gasket
- Note installation position

7 Retainer
- For heat shield item 12

8 Washer
9 From air cleaner
10 10 Nm

satelettronica
Protected by copyright. Copying for private or commercial purposes, in part or in whole, is not permitted unless authorised by Volkswagen AG. Volkswagen AG does not guarantee or accept any liability with respect to the correctness of information in this document. Copyright by Volkswagen AG.

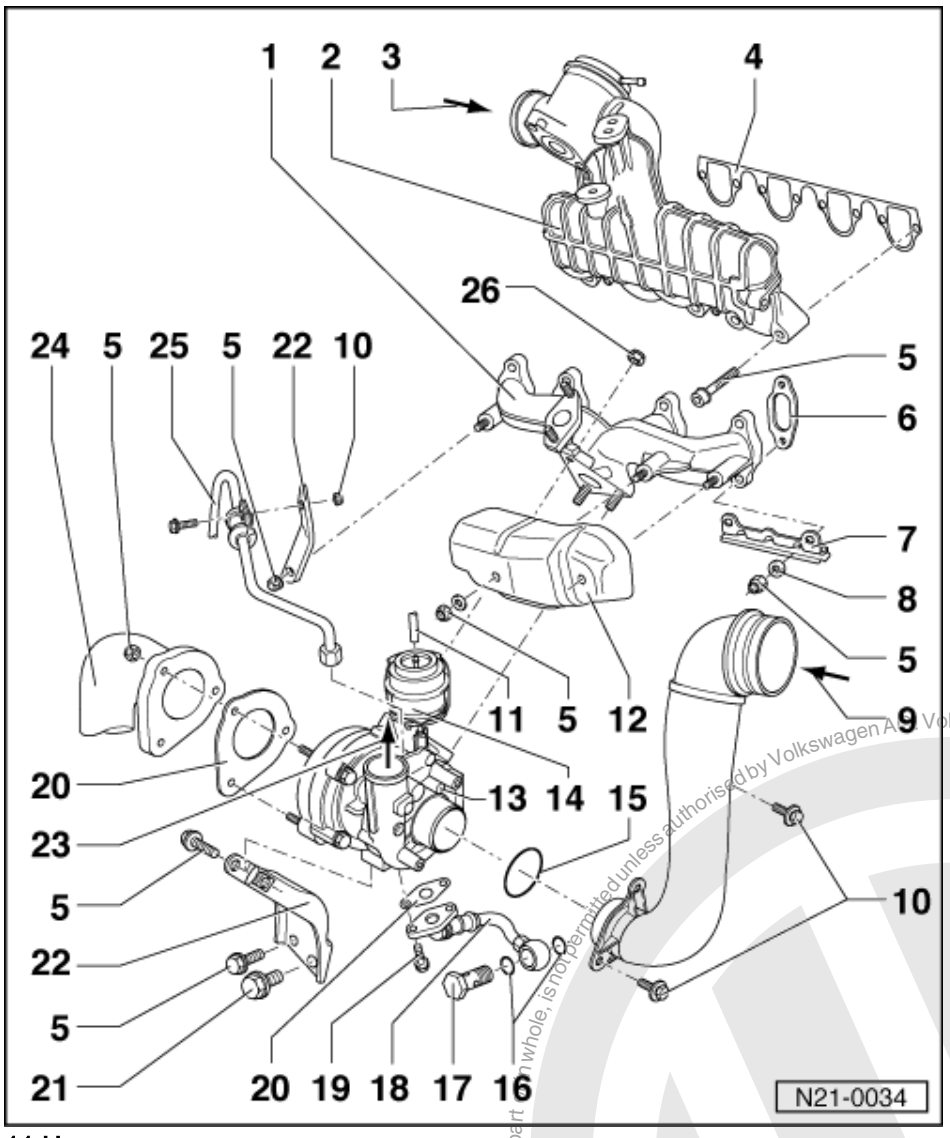

11 Hose
- To charge pressure control solenoid valve (N75) => Page 140 , turbocharger hose connections

12 Heat shield
- Engage in bracket item 7

13 Turbocharger
- Removing and installing => Page 142
- Checking boost pressure => Page 146

14 Pressure unit
- For charge pressure control
- Integral part of turbocharger cannot be replaced

15 O-ring
- Renew if damaged

16 Seal
- Renew

satelettronica
Protected by copyright. Copying for private or commercial purposes, in part or in whole, is not permitted unless authorised by Volkswagen AG. Volkswagen AG does not guarantee or accept any liability with respect to the correctness of information in this document. Copyright by Volkswagen AG.

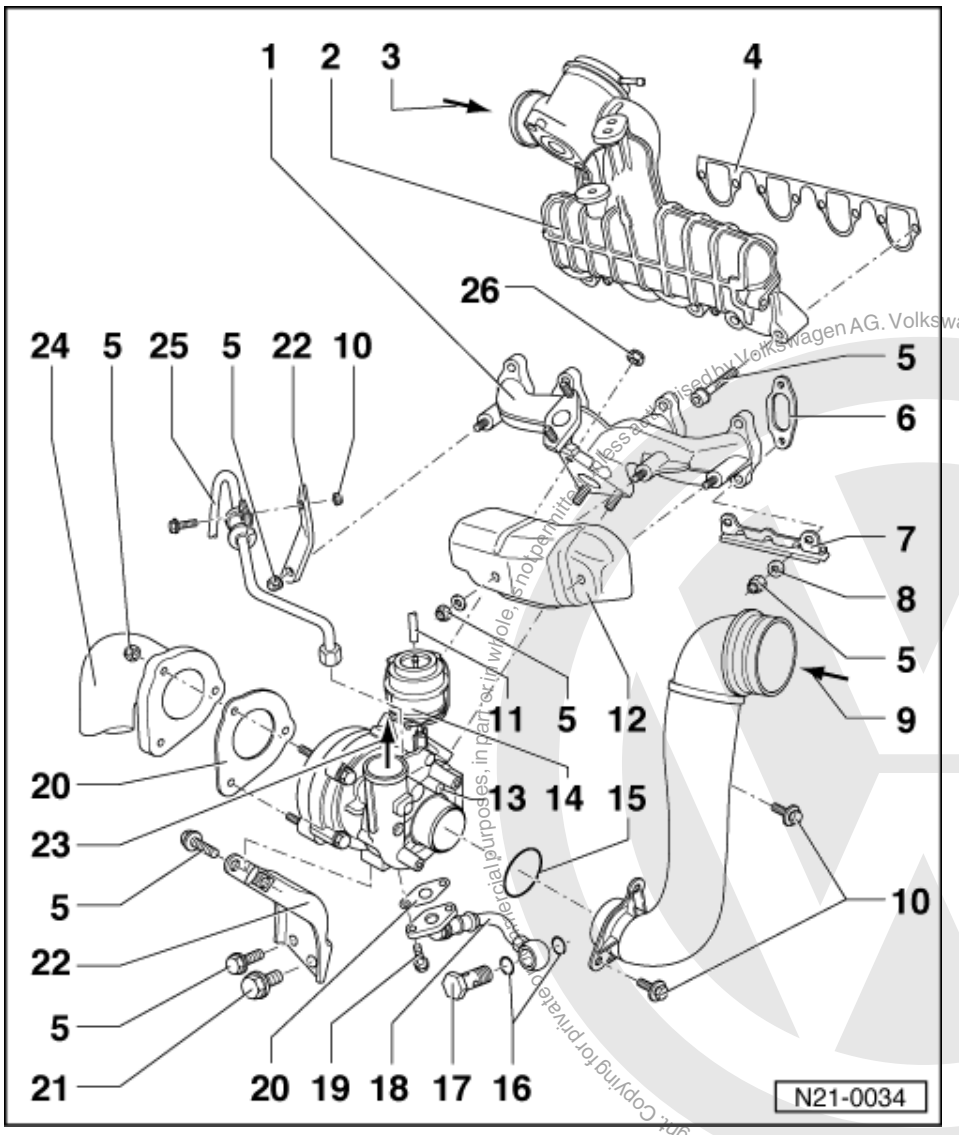

17 Banjo bolt, 30 Nm
18 Oil return pipe
- To cylinder block

19 20 Nm
20 Gasket
- Renew

21 40 Nm
22 Retainer
23 To charge air cooler
24 Front exhaust pipe
25 Oil supply pipe
- From oil filter bracket
  => Page 81 , item 8
- Fill connection with engine oil before screwing on oil supply pipe.
- Removing and installing =>page 86

26 25 Nm
- Renew
- Coat threads and bolt head seating surface with G 000 500

Protected by copyright. Copying for private or commercial purposes, in part or in whole, is not permitted unless authorised by Volkswagen AG. Volkswagen AG does not guarantee or accept any liability with respect to the correctness of information in this document. Copyright by Volkswagen AG.
satelettronica

1.5 - Removing and installing parts of charge air cooling system

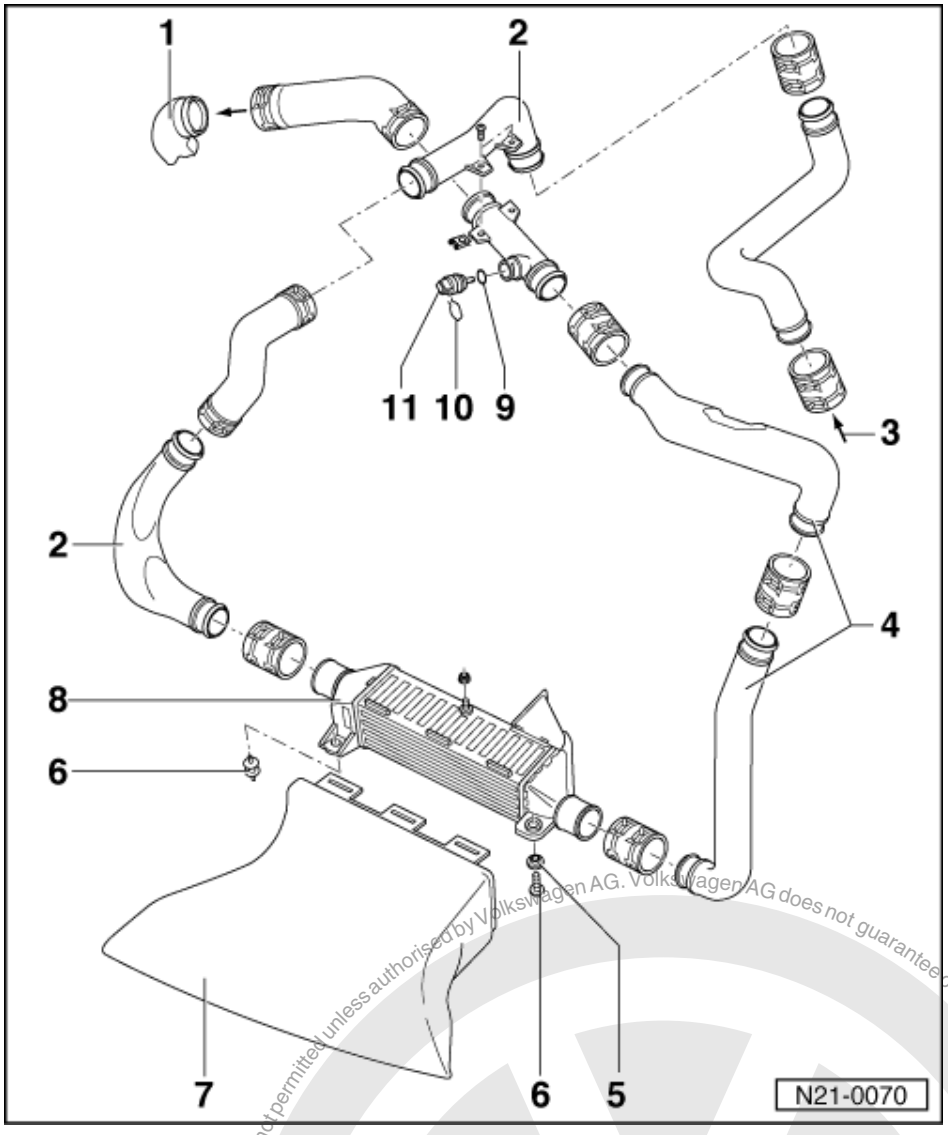

Engine codes AFN, AHU, ALE

Notes:

- All hose connections secured by clips.
- V.A.G 1921 pliers are recommended when installing spring-type clips.
- Charge air system must be free of leaks.

1 Intake manifold
2 Connecting pipe
  - Charge air cooler/turbocharger
3 From exhaust gas turbocharger
4 Connecting pipe
  - Charge air cooler/intake manifold
5 Washer

Protected by copyright. Copying for private or commercial purposes, in part or in whole, is not permitted unless authorised by Volkswagen AG. Volkswagen AG does not guarantee or accept any liability with respect to the correctness of information in this document. Copyright by Volkswagen AG.
satelettronica

Copyright by Volkswagen AG. Volkswagen AG does not guarantee or accept any liability with respect to the correctness of information in this document. Copying for private or commercial purposes, in part or in whole, is not permitted unless authorised by Volkswagen AG.

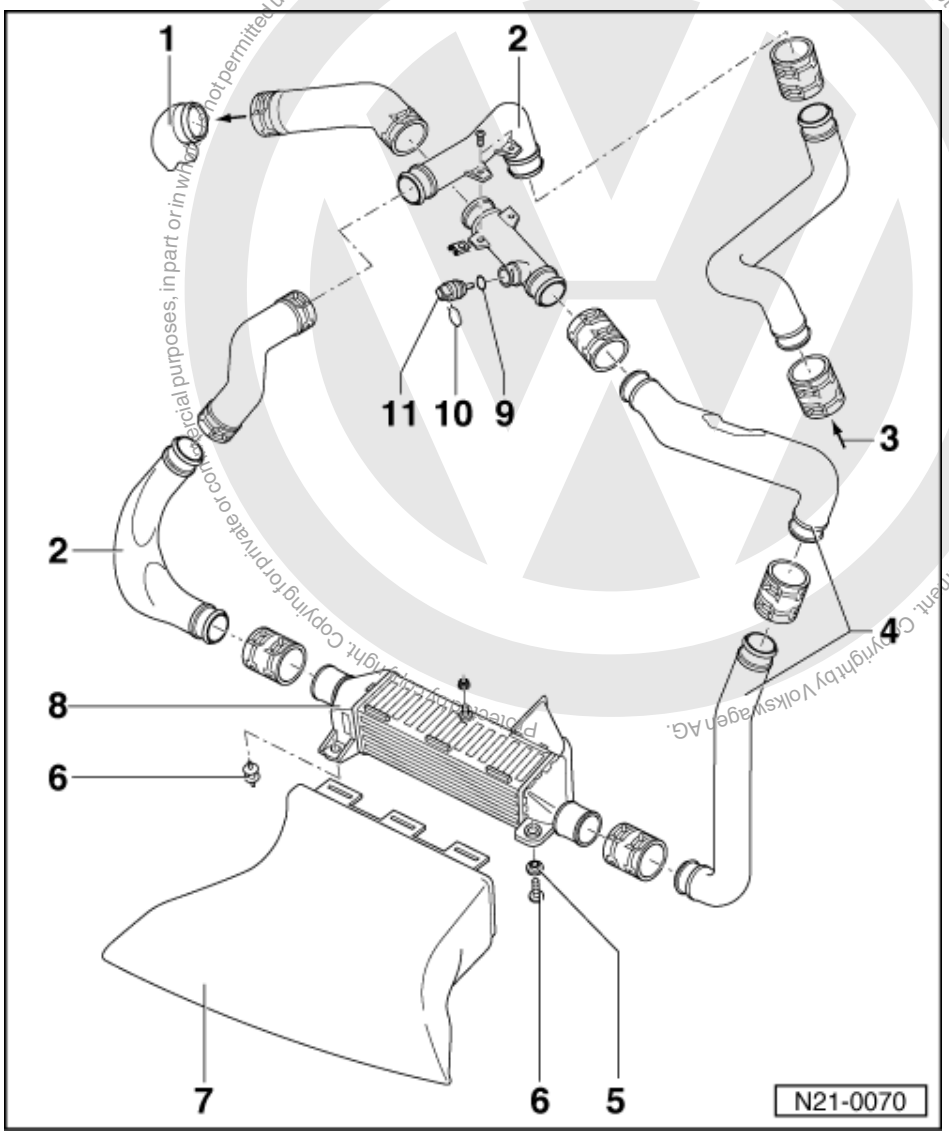

6 10 Nm
7 Air ducting
8 Charge air cooler
9 O-ring
- Renew if damaged

10 Retaining clip
11 Intake manifold temperature sender (G72)

satelettronica

1.6 - Exhaust gas turbocharger hose/pipe connections

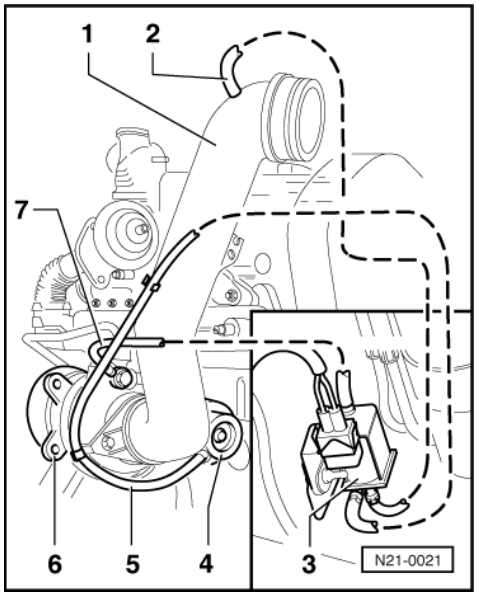

Engine codes AHU, ALE

1 - -> Intake hose
2 - Hose, black
3 - Charge pressure control solenoid valve (N75)
4 - Charge air control pressure unit
5 - Hose, blue
6 - Turbocharger
7 - Hose, black

Protected by copyright. Copying for private or commercial purposes, in part or in whole, is not permitted unless authorised by Volkswagen AG. Volkswagen AG does not guarantee or accept any liability with respect to the correctness of information in this document. Copyright by Volkswagen AG.

satelettronica

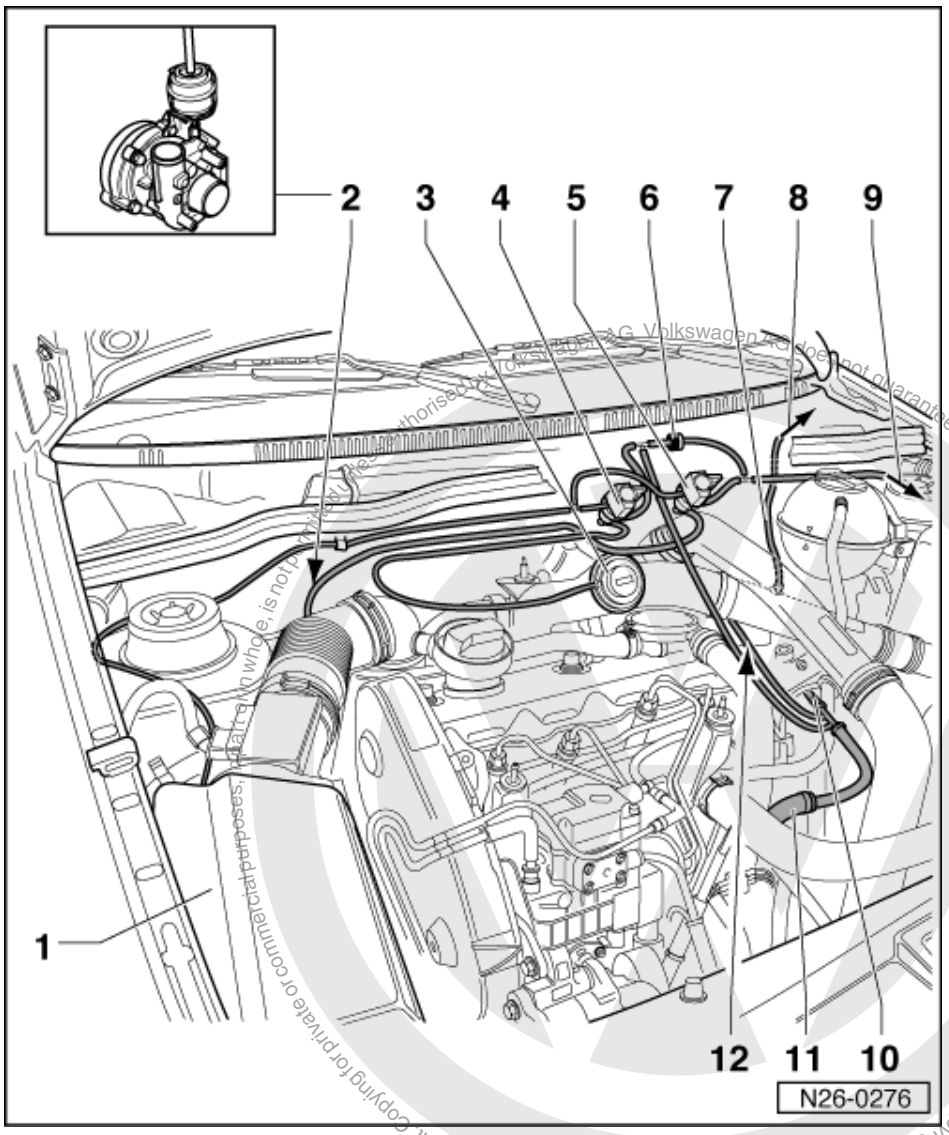

Protected by copyright. Copying for private or commercial purposes, in part or in whole, is not permitted unless authorised by Volkswagen AG. Volkswagen AG does not guarantee or accept any liability with respect to the correctness of information in this document. Copyright by Volkswagen AG.

satelettronica

Engine code AFN

1 Air cleaner
2 Pressure unit
- For charge pressure control

3 Exhaust gas recirculation valve (mechanical)
4 Exhaust gas recirculation valve (N18)
5 Solenoid valve for charge pressure control (N75)
6 Non-return valve
- White connection to charge pressure control solenoid valve -item 5 - and to vacuum reservoir

7 Intake manifold/charge air cooler vacuum hose
8 To Diesel direct injection system control unit (J248)

Protected by copyright. Copying for private or commercial purposes, in part or in whole, is not permitted unless authorised by Volkswagen AG. Volkswagen AG does not guarantee or accept any liability with respect to the correctness of information in this document. Copyright by Volkswagen AG.

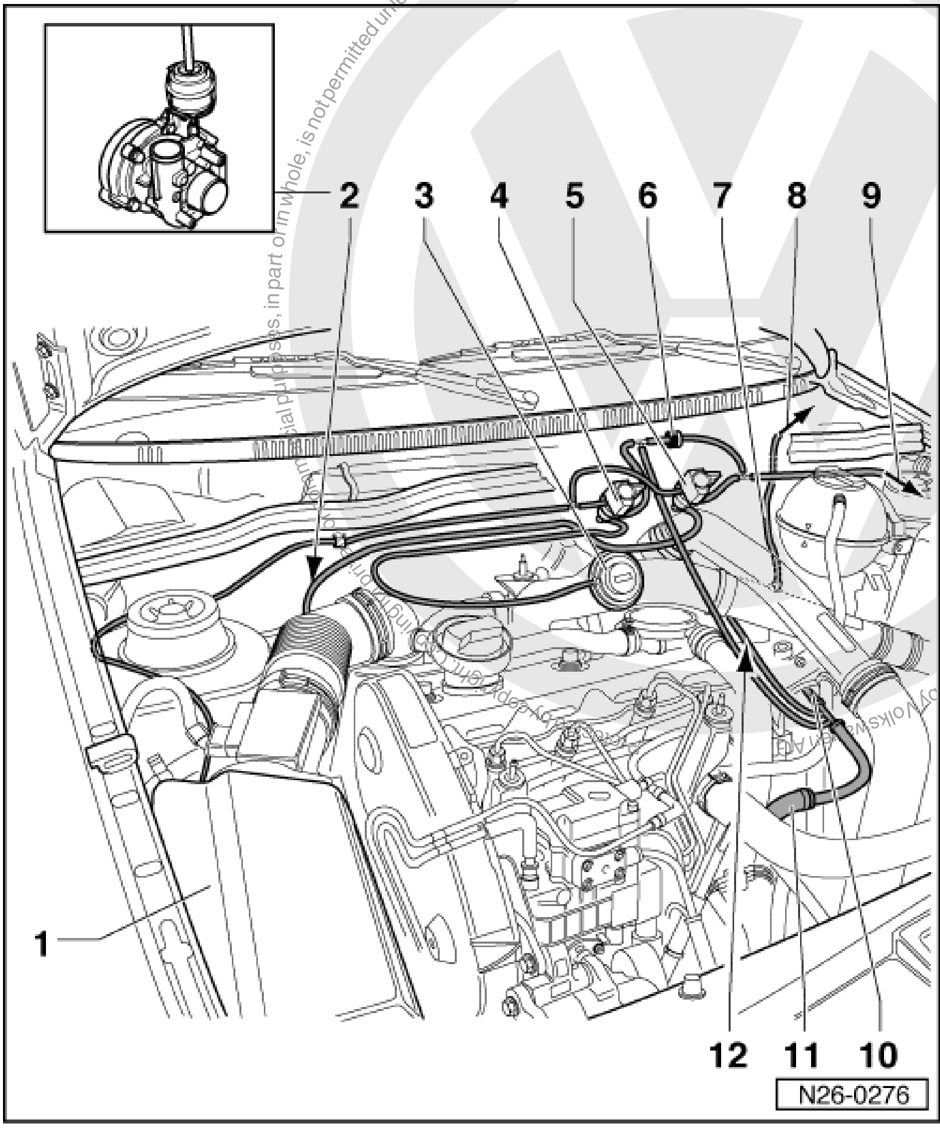

9 To vacuum reservoir
- In wheel housing

10 Non-return valve

11 To vacuum pump

12 To air conditioning system
- Vacuum connection for vehicles with air conditioning system

=> Repair group 87; Air conditioning system with manual control Air conditioning system with manual control

1.7 - Removing and installing turbocharger

Special tools, workshop equipment, testers, measuring instruments and auxiliary items required

- V.A.G 1331 Torque wrench (5...50 Nm)
- Grease G 000 500
- Hot bolt paste G 052 112.A3

satelettronica

Engine codes AHU, ALE

Engine code AFN => Page 144

Removing

- With ignition switched off disconnect battery earth strap.

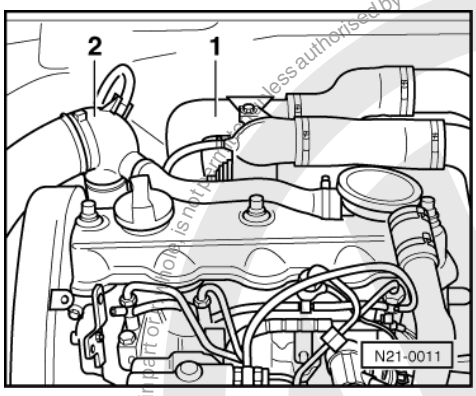

Note:

If necessary the anti-theft coding for the radio must be obtained first.

- Remove engine cover.
- -> Remove hoses between intake manifold/turbocharger -1- and turbocharger/air cleaner -2-.

- Pull off black hose for charge pressure control solenoid valve (N75) on turbocharger or remove banjo bolt.
- Disconnect exhaust pipe from turbocharger.
- Disconnect oil supply pipe from turbocharger and securing clip from intake manifold.

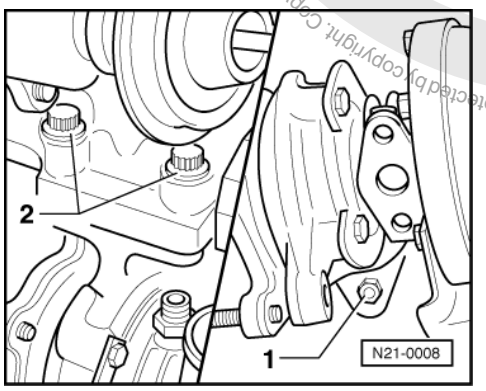

- Remove turbocharger/cylinder block support.
- Disconnect oil return pipe on turbocharger.
- -> Remove securing nut -1- from below and securing bolts -2- from above.
- Lift turbocharger out, upwards.
- Pull blue hose for charge pressure valve off pressure unit.

Installing

- Install blue hose for charge pressure valve on pressure unit and secure with a clamp.
- Grease securing bolts -2- threads and head contact surfaces with G 000 500 grease.
- Fit turbocharger on exhaust manifold and tighten securing bolts -2- handtight.
- Install securing nut -1- and tighten to
  20 Nm.

Protected by copyright. Copyright by Volkswagen AG.
AG, Volkswagen AG does not guarantee or accept any liability with respect to the correctness of information in this document. Copyright by Volkswagen AG.
satelettronica

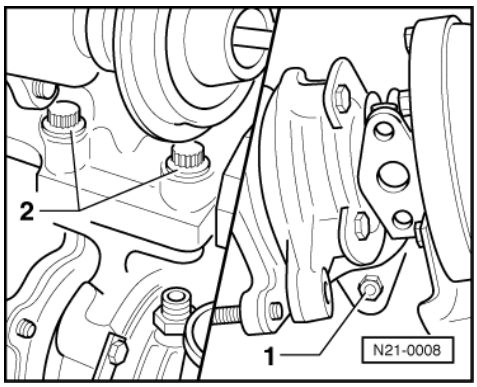

- -> Tighten securing bolts -2- to
  35 Nm.
- Install turbocharger/cylinder head support and tighten to
  25 Nm.
- Install oil return pipe with new seal and tighten to
  20 Nm.
- Install front exhaust pipe with new gasket onto flange and tighten to
  25 Nm.
- Fill the turbocharger with engine oil via the oil supply connection.
- Install oil supply pipe and tighten to
  25 Nm.
- Tighten oil supply pipe support to
  10 Nm.

- Install hose for charge pressure control solenoid valve (N75) on turbocharger and secure with clamp or banjo bolt with new seal and tighten to
  15 Nm.
- Insert O-ring into intake pipe, then install intake pipe on turbocharger and tighten to
  10 Nm.
- Install pressure pipe.
- After installing the turbocharger, run engine for approx. 1 minute at idling speed, do not rev. up immediately. This ensures the turbocharger is properly lubricated.

Engine code AFN

Removing

- With ignition switched off disconnect battery earth strap.

Note:

If necessary the anti-theft coding for the radio must be obtained first.

- Remove engine cover.

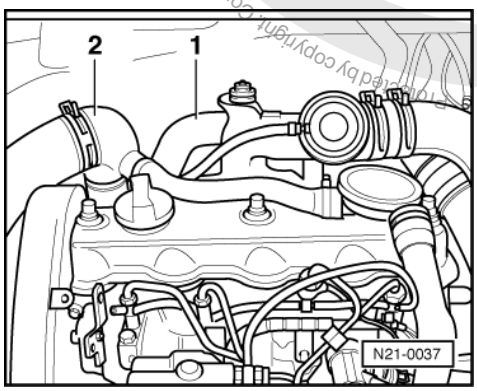

- -> Remove pressure pipe turbocharger/charge air cooling -1- and intake pipe turbocharger/air cleaner -2-.
- Pull charge pressure control vacuum pipe off pressure unit.
- Disconnect oil supply pipe from turbocharger and securing clip from intake manifold.

satelettronica

- Disconnect exhaust pipe from turbocharger.
- Remove turbocharger/cylinder block support.
- Disconnect oil return pipe on turbocharger.

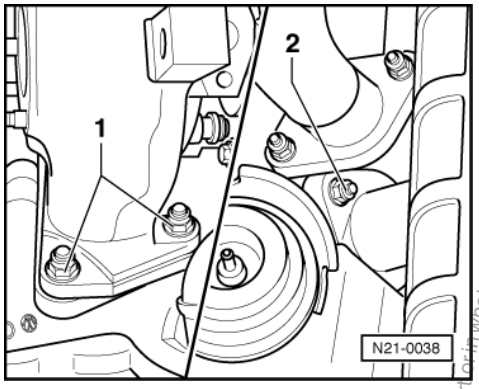

- -> Remove securing nuts -1- from below and securing nut -2- from above.
- Lift turbocharger out, upwards.

Installing

- Grease exhaust manifold and turbocharger stud threads with G 052 112 A3 (hot bolt paste).

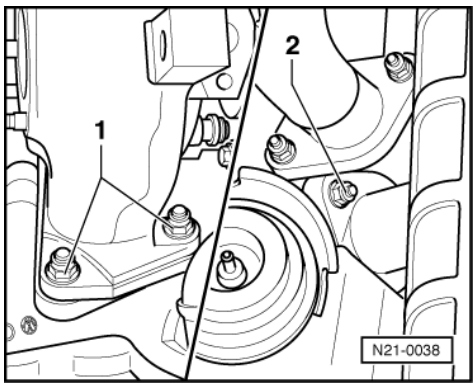

- -> Fit turbocharger on exhaust manifold and tighten securing bolts -2- handtight.
- Install securing nuts -1- and tighten to
  25 Nm.
- Install oil return pipe with new seal and tighten to
  20 Nm.
- Install turbocharger/cylinder block mounting and tighten to
  M8: 25 Nm
  M10: 40 Nm
- Tighten securing nut -2- to
  25 Nm.
- Install front exhaust pipe with new gasket onto flange and tighten to
  25 Nm.

- Fill the turbocharger with engine oil via the oil supply connection.
- Install oil supply pipe and tighten to
  25 Nm.
- Tighten oil supply pipe support to
  10 Nm.
- Insert O-ring into intake pipe and tighten intake pipe to
  10 Nm
  on turbocharger and intake manifold.
- Connect vacuum hose to charge pressure control pressure unit.
- Install turbocharger/charge air cooling pressure pipe and turbocharger/air cleaner intake pipe.
- After installing the turbocharger, run engine for approx. 1 minute at idling speed, do not rev. up immediately. This ensures the turbocharger is properly lubricated.

Protected by copyright. Copying for private or commercial purposes, in part or in whole, is not permitted unless authorised by Volkswagen AG. Volkswagen AG does not guarantee or accept any liability with respect to the correctness of information in this document. Copyright by Volkswagen AG.
satelettronica

2 - Checking charge pressure system

2.1 - Checking charge pressure system

Engine code AFN =>Page 150

2.2 - Checking turbocharger

(Only engine codes AHU, ALE)

Special tools, workshop equipment, testers, measuring instruments and auxiliary items required

- Turbocharger tester V.A.G 1397 A

Check conditions

- No fault stored in fault memory

=> Repair group 01; Fault memory; Interrogating fault memory Fault memory Interrogating fault memory

- Carry out final control diagnosis

=> Repair group 01; Final control diagnosis; Performing final control diagnosis Final control diagnosis Performing final control diagnosis

- No leaks on intake and exhaust systems.
- Control pipe to charge pressure regulating valve is not blocked, loose or leaking.
- No faults in engine and fuel injection system, e.g. commencement of injection, injectors and compression pressure.
- Engine oil temperature min. 80 °C

Test sequence

Observe following if test and measuring instruments are required during a test drive:

- Test and measuring instruments must be secured to rear seat and operated by a 2nd person from this location.

  If test and measuring instruments are operated from front passenger's seat and the vehicle is involved in an accident, there is a possibility that the person sitting in this seat may receive serious injuries when the airbag is triggered.

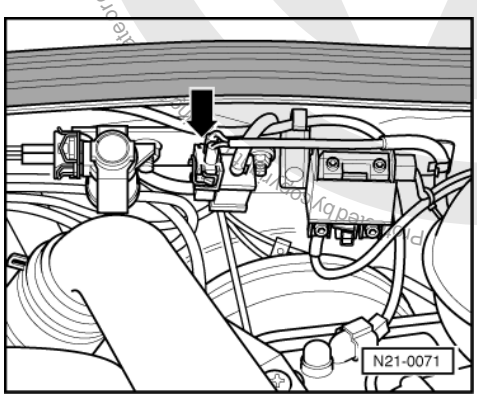

- The charge pressure is measured under full load, whilst driving or on a rolling road. Test duration per measurement max. 10 seconds.

satelettronica

- -> Pull connector -arrow- off charge pressure control solenoid valve (N75).

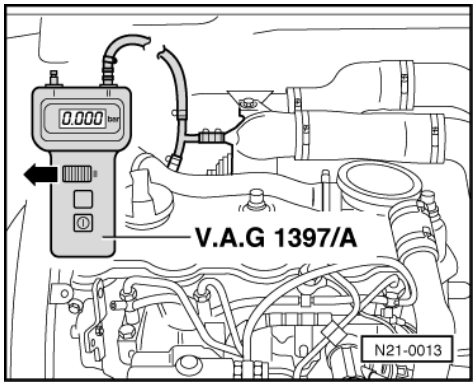

- -> Pull off connecting hose running between intake manifold and diesel direct injection system control unit (J248) and using T-piece connect in turbocharger tester V.A.G 1397 A.
- Select measuring range II.

Notes:

- To operate turbocharger tester see operating instructions.
- The hoses must be connected so that there is no possibility of leaks.
- Ensure that the pressure hose is not trapped between the bonnet and the body.

- Measure charge pressure at full throttle:
  On a rolling road:
  In 3rd gear or selector lever position 2 at 3500...4000 rpm.
  Whilst driving:
  In 2nd gear or selector lever position 1 at full throttle acceleration whilst observing rev counter.

Note:

The brake pedal must not be operated whilst taking measurements. The control unit thus reduces the fuel quantity which leads to incorrect measurements.

- Press the memory button "M" on turbocharger tester at 3500...4000 rpm and read off values.
  Specification: (Relative pressure)
  0.50...0.65 bar

If the charge pressure is not attained:

- Check charge pressure control valve pressure unit and renew if necessary.
- Repeat charge pressure check.

If the charge pressure has still not been attained:

- Replace turbocharger.

If the charge pressure is exceeded:

- Check charge pressure control solenoid valve (N75). (Through flow in hose from turbocharger via valve to pressure unit when connector is pulled off).
- Check pressure unit for charge pressure regulating valve is securely mounted on turbocharger.
- Check charge pressure control valve pressure unit as well as the operating rod and renew if necessary.
- Check shaft mounting for charge pressure regulating valve in turbocharger for ease of movement. When corroded together, renew turbocharger.

Protected by copyright. Copying for private or commercial purposes, in any form or medium, not permitted unless authorised by Volkswagen AG. Volkswagen AG does not guarantee or accept any liability with respect to the correctness of information in this document. Copyright by Volkswagen AG.
satelettronica

2.3 - Checking pressure unit for charge pressure regulating valve

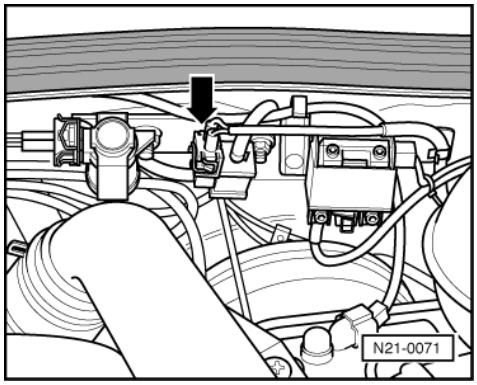

(Only engine codes AHU, ALE)

Check conditions

- Engine oil temperature min. 80 °C

Test sequence

- -> Pull connector -arrow- off charge pressure control solenoid valve (N75).

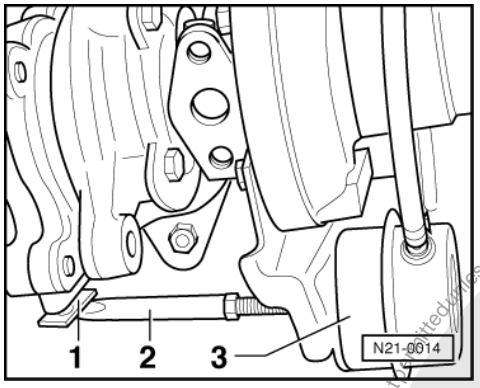

- -> Start engine and raise to maximum speed briefly by operating throttle. The operating rod -2- for charge pressure regulating valve must
  move.

If the operating rod does not move:

- Check charge pressure regulating valve lever -1- for ease of movement. When corroded together, renew turbocharger.

If the operating rod does not move, even though the lever is free to move:

- Renew pressure unit for charge pressure regulating valve -3-.

2.4 - Removing and installing pressure unit for charge pressure regulating valve

(Only engine codes AHU, ALE)

Special tools, workshop equipment, testers, measuring instruments and auxiliary items required

- V.A.G 1331 Torque wrench (5...50 Nm)

Protected by copyright. Copying for private or commercial purposes, in part or in whole, is not permitted unless authorised by Volkswagen AG. Volkswagen AG does not guarantee or accept any liability with respect to the correctness of information in this document. Copyright by Volkswagen AG.
satelettronica

Removing

- Remove turbocharger.

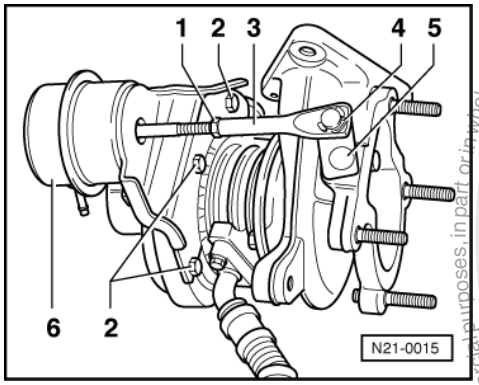

- -> Unclip securing clip -4-.
- Remove securing bolts -2-.
- Take pressure unit -6- off.

Installing

- Install pressure unit -6- on turbocharger and tighten to
  10 Nm.
  Install securing bolts -2- with D 6.
- Loosen operating rod -3- lock nut -1-.
- Swing charge pressure regulating valve lever -5- in towards pressure unit onto stop and hold.
- Adjust rod length -3- so that the rod eye will fit easily on lever pin -5-. (Lever lies against stop with no play).
- From this position, turn operating rod in
  8 full turns
  (Rod shortens).
- Tighten lock nut -1-.
- Fit operating rod on to lever and install securing clip -4-.
- Install turbocharger.

2.5 - Checking charge pressure control

(Only engine codes AHU, ALE)

Special tools, workshop equipment, testers, measuring instruments and auxiliary items required

- Fault reader V.A.G 1551 or vehicle system tester V.A.G 1552 with cable V.A.G 1551/3
- Turbocharger tester V.A.G 1397 A
- Test box V.A.G 1598/18
- Hand multimeter V.A.G 1526 or multimeter V.A.G 1715
- Adapter set V.A.G 1594
- Current flow diagram

To enable the charge pressure control to be checked it is essential that the charge pressure is determined without charge pressure control first => Page 146 .

Test sequence

- The charge pressure is measured with the fault reader V.A.G 1551 during a test drive.

Observe following if test and measuring instruments are required during a test drive:

- Test and measuring instruments must be secured to rear seat and operated by a 2nd person from this location.

Copyright by Volkswagen AG. Volkswagen AG does not guarantee or accept any liability with respect to the correctness of information in this document. Copyright by Volkswagen AG. Protected by copyright. Copying for private or commercial purposes, in part or in whole, is not permitted unless authorised by Volkswagen AG.
satelettronica

If test and measuring instruments are operated from front passenger's seat and the vehicle is involved in an accident, there is a possibility that the person sitting in this seat may receive serious injuries when the airbag is triggered.

- Connector connected to solenoid valve charge pressure control -N75.
- With engine running at idle speed, connect fault reader V.A.G 1551 (V.A.G 1552) and select engine electronics control unit with the "Address word" 01:

=> Repair group 01; Self-diagnosis; Connecting fault reader V.A.G 1551 and selecting engine electronics control unit Self-diagnosis Connecting fault reader V.A.G 1551 and selecting engine electronics control unit

-> Indicated on display:

```
Rapid data transfer      HELP
Select function XXX
```

- Press keys 0 and 8 for the function "Read measured value block" and confirm entry with Q key.

-> Indicated on display:

```
Read measured value block      HELP
Input display group number XXX
```

- Press keys 0, 1 and 1 for display group 11 and confirm entry by pressing Q.
- ->

```
Read measured value block 11      "
     840 rpm      938 mbar      978 mbar      92
%
```

Indicated on display:
- Accelerate vehicle in 3rd gear from about 1500 rpm using full throttle.
- Press PRINT key on V.A.G 1551 at approx. 3000 rpm.

To enable the charge pressure control to be checked it is essential that the charge pressure is known without charge pressure control first

Specification on V.A.G 1397/A: 1.650...2.000 bar

-> Specification on V.A.G 1551: 1650...2000 mbar (in display zone 3)

```
Read measured value block 11
     3090 rpm      1866 mbar      1917
mbar      62 %
```

Note:

The charge pressure is determined with the turbocharger tester V.A.G 1397/A. The fault reader V.A.G 1551 serves as a check that the charge pressure is being recorded in the control unit.

If the specification is not obtained:

- Check solenoid valve for charge pressure control (N75) => Page 152
- Check vacuum hoses => Page 140

Engine code AFN

Check conditions

- No leaks on intake and exhaust systems.
- No faults in engine and fuel injection system, e.g. commencement of injection, injectors and compression pressure.
- Engine oil temperature min. 80 °C

Test sequence

- The charge pressure is measured with the turbocharger tester V.A.G 1397/A and the fault reader V.A.G 1551 during a test drive.

Protected by copyright. Copying for private or commercial purposes, in part or in whole, is not permitted unless authorised by Volkswagen AG. Volkswagen AG does not guarantee or accept any liability with respect to the correctness of information in this document. Copyright by Volkswagen AG.
satelettronica

Observe following if test and measuring instruments are required during a test drive:

- Test and measuring instruments must be secured to rear seat and operated by a 2nd person from this location.

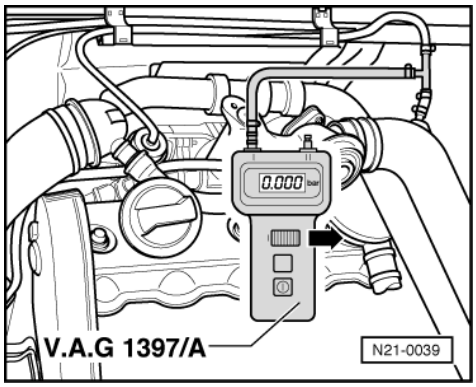

If test and measuring instruments are operated from front passenger's seat and the vehicle is involved in an accident, there is a possibility that the person sitting in this seat may receive serious injuries when the airbag is triggered.

- -> Pull off connecting hose running between intake manifold and diesel direct injection system control unit (J248) and using T-piece connect in turbocharger tester V.A.G 1397 A.
- Select measuring range I.

Notes:

- To operate turbocharger tester see operating instructions.
- The hoses must be connected so that there is no possibility of leaks.
- Ensure that the pressure hose is not trapped between the bonnet and the body.

- With engine running at idle speed, connect fault reader V.A.G 1551 (V.A.G 1552) and select engine electronics control unit with the "Address word" 01:

=> Repair group 01; Self-diagnosis; Connecting fault reader V.A.G 1551 and selecting engine electronics control unit Self-diagnosis Connecting fault reader V.A.G 1551 and selecting engine electronics control unit

-> Indicated on display:

```
Rapid data transfer      HELP
Select function XXX
```

- Press keys 0 and 8 for the function "Read measured value block" and confirm entry with Q key.

-> Indicated on display:

```
Read measured value block      HELP
Input display group number XXX
```

- Press keys 0, 1 and 1 for display group 11 and confirm entry by pressing Q.

```
Read measured value block 11      "
840 rpm      938 mbar      978 mbar      92 %
```

-> Indicated on display:

- Accelerate vehicle in 3rd gear from about 1500 rpm using full throttle.
- Press PRINT key on V.A.G 1551 at approx. 3000 rpm and simultaneously the memory key on V.A.G 1397/A..

Specification on V.A.G 1397/A: 1.700...2.500 bar

-> Specification on V.A.G 1551: 1700...2500 mbar (in display zone 3)

```
Read measured value block 11      "
     3090 rpm      1866 mbar      1917
mbar      62 %
```

Reproduction of this document or parts thereof is not permitted without written authorization by Volkswagen AG. Volkswagen AG does not guarantee or accept any liability with respect to the correctness of information in this document. Copyright by Volkswagen AG.
Copyright by Volkswagen AG, Wolfsburg. All rights reserved. Reproduction or commercial use is not permitted unless authorized by Volkswagen AG.
satelettronica

Note:

The charge pressure is determined with the turbocharger tester V.A.G 1397/A. The fault reader V.A.G 1551 serves as a check that the charge pressure is being recorded in the control unit.

If the specification is not obtained:

- Carry out final control diagnosis and activate the charge pressure control solenoid valve:

=> Repair group 01; Final control diagnosis; Performing final control diagnosis Final control diagnosis Performing final control diagnosis

-> Indicated on display:

```
Final control diagnosis
Charge pressure control solenoid valve -
N75
```

The solenoid valve must function and the charge pressure control pressure unit rod must move to and fro (at least 3...4 times, as long as there is vacuum in vacuum reservoir).

- If the rod moves and the charge pressure specifications are not obtained, renew turbocharger.

If the rod does not move:

- Check solenoid valve for charge pressure control (N75) => Page 152
- Check vacuum hoses => Page 140

If the rod does not move but the solenoid operates:

- Connect vacuum pump V.A.G 1390 to charge pressure regulating valve and check rod for ease of movement.
- If the rod does not move easily, replace exhaust turbocharger.

Electrically checking charge pressure control solenoid valve (N75)

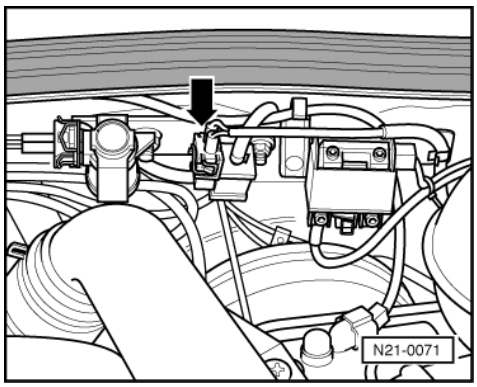

- Switch off ignition.
- -> Pull connector -arrow- off charge pressure control solenoid valve (N75).

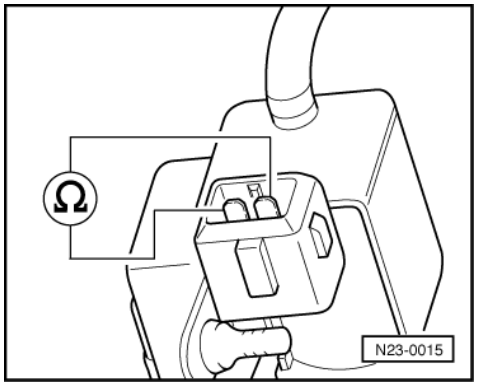

satelettronica

-> Engine codes AHU, ALE

- Measure resistance between valve contacts.

Specification: 25...45ω

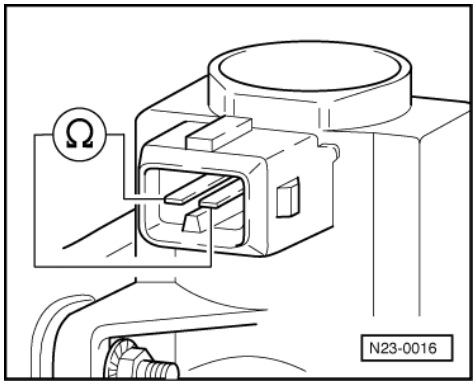

-> Engine code AFN

Specification: 14...20 ω

If the specification is not obtained:

- Replace charge pressure control solenoid valve (N75).

Checking voltage supply from chrage pressure control solenoid valve (N75)

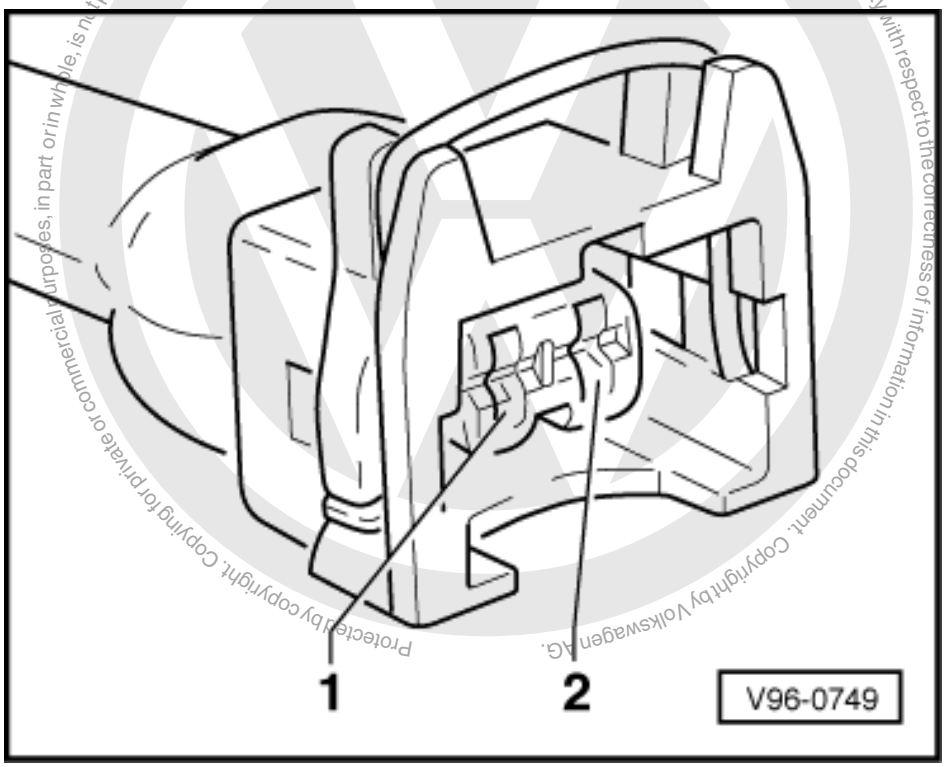

- Switch off ignition.
- Pull connector off charge pressure control solenoid valve.
- -> Connect hand multimeter V.A.G 1526 with aux. cables from V.A.G 1594 to the contact 1 and earth.
- Select 20 V measurement range.
- Switch ignition on.
- Specification:

Protected by copyright. Copying for private or commercial purposes, in part or in whole, is not permitted unless authorised by Volkswagen AG. Volkswagen AG does not guarantee or accept any liability with respect to the correctness of information in this document. Copyright by Volkswagen AG.

satelettronica

approx. battery voltage

If the specification is not obtained:

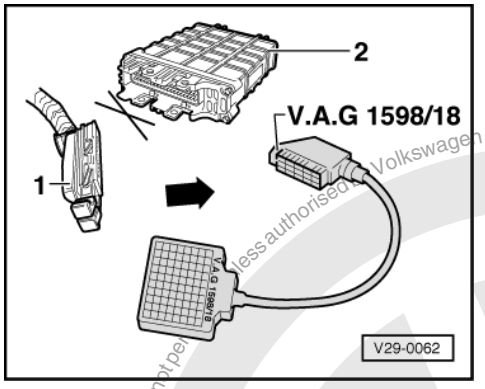

- Check wiring connection to valve N75.

Checking wiring connection to charge pressure control solenoid valve (N75)

Vehicles with 68-pin control unit

- Switch off ignition.
- -> Connect test box V.A.G 1598/18 to control unit wiring loom.

The following wiring connections are to be checked for open circuits and/or short to positive or negative.

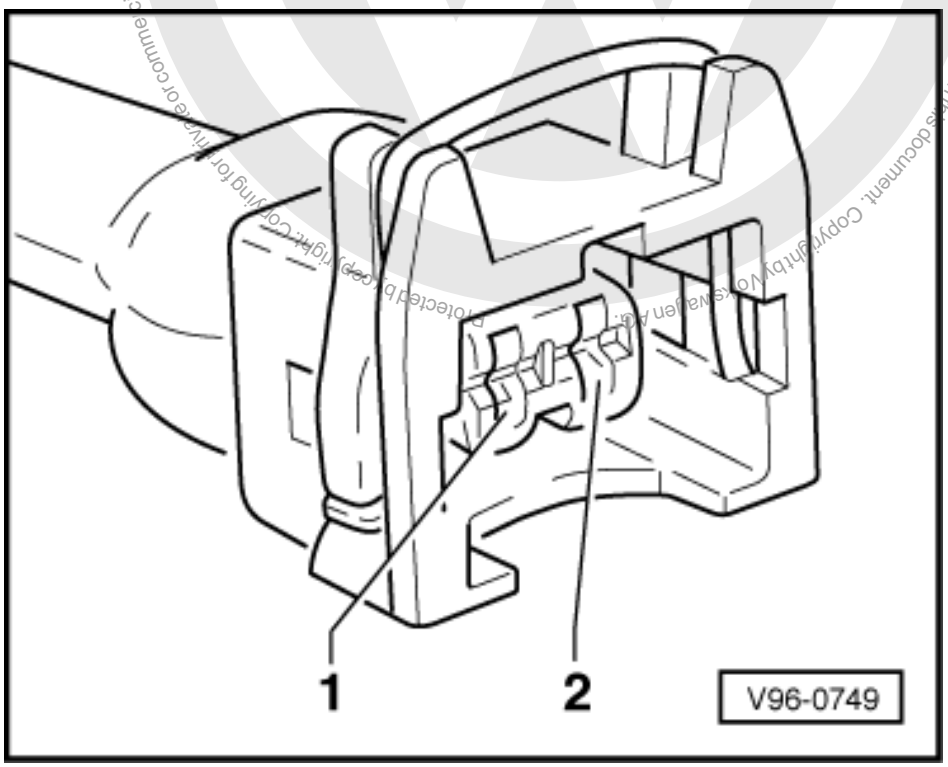

- -> Wiring from connector contact 1 to test box socket 68.
- Wiring from connector contact 2 to test box socket 47.
- Rectify any open/short circuit as necessary.
- If neither an open or short circuit exists, renew Diesel direct injection system control unit.

Protected by copyright. Copying for private or commercial purposes, in part or in whole, is not permitted unless authorised by Volkswagen AG. Volkswagen AG does not guarantee or accept any liability with respect to the correctness of information in this document. Copyright by Volkswagen AG.
satelettronica

Vehicles with 80-pin control unit

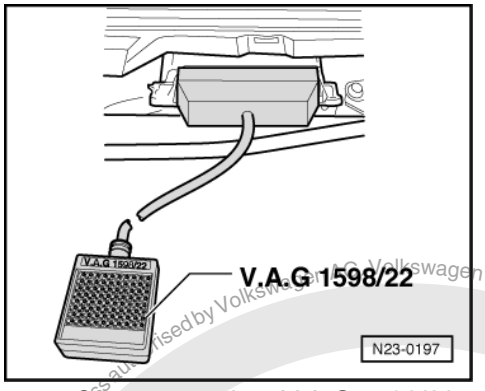

- -> Connect test box V.A.G 1598/22 to control unit wiring harness.
- Check wiring between test box and connector for open circuit according to current flow diagram.
  Contact 1+ socket 28 + 2
  Contact 2+ socket 15
  Wire resistance: max. 1.5 ω

If no fault is detected in the wiring:

- Renew Diesel direct injection system control unit (J248)

=> Repair group 23; Renewing engine control unit, coding and matching; Renewing engine control unit Renewing engine control unit, coding and matching Renewing engine control unit

Continuation for all vehicles

If no fault is detected in the wiring:

- Renew Diesel direct injection system control unit (J248)

=> Repair group 23; Renewing engine control unit, coding and matching; Renewing engine control unit Renewing engine control unit, coding and matching Renewing engine control unit

Protected by copyright. Copyright by Volkswagen AG.
Copyright by Volkswagen AG. Volkswagen AG does not guarantee or accept any liability with respect to the correctness of information in this document.
Copying for private or commercial purposes, in part or in whole, is not permitted unless authorised by Volkswagen AG.
satelettronica

26 - Exhaust system

1 - Removing and installing parts of exhaust system

1.1 - Removing and installing parts of exhaust system

Notes:

- Removing and installing exhaust manifold for engine code AHU, ALE, AFN =>Page 129 , Removing and installing exhaust gas turbocharger with attachments.
- After working on the exhaust system ensure that the system is not under stress, and that it has sufficient clearance from the bodywork. If necessary, loosen double and single clamps and align silencer and exhaust pipe so that sufficient clearance is maintained to the bodywork and the support rings are evenly loaded.
- Renew self-locking nuts.

Exhaust system engine codes:

- AFN => Page 157
- AHU => Page 158
- ALE => Page 159
- AEY, AHB,1Y => Page 160
- AKW => Page 161

Protected by copyright. Copying for private or commercial purposes, in part or in whole, is not permitted unless authorised by Volkswagen AG. Volkswagen AG does not guarantee or accept any liability with respect to the correctness of information in this document. Copyright by Volkswagen AG.

satelettronica

1.2 - Front exhaust pipe and catalyst with its attachments

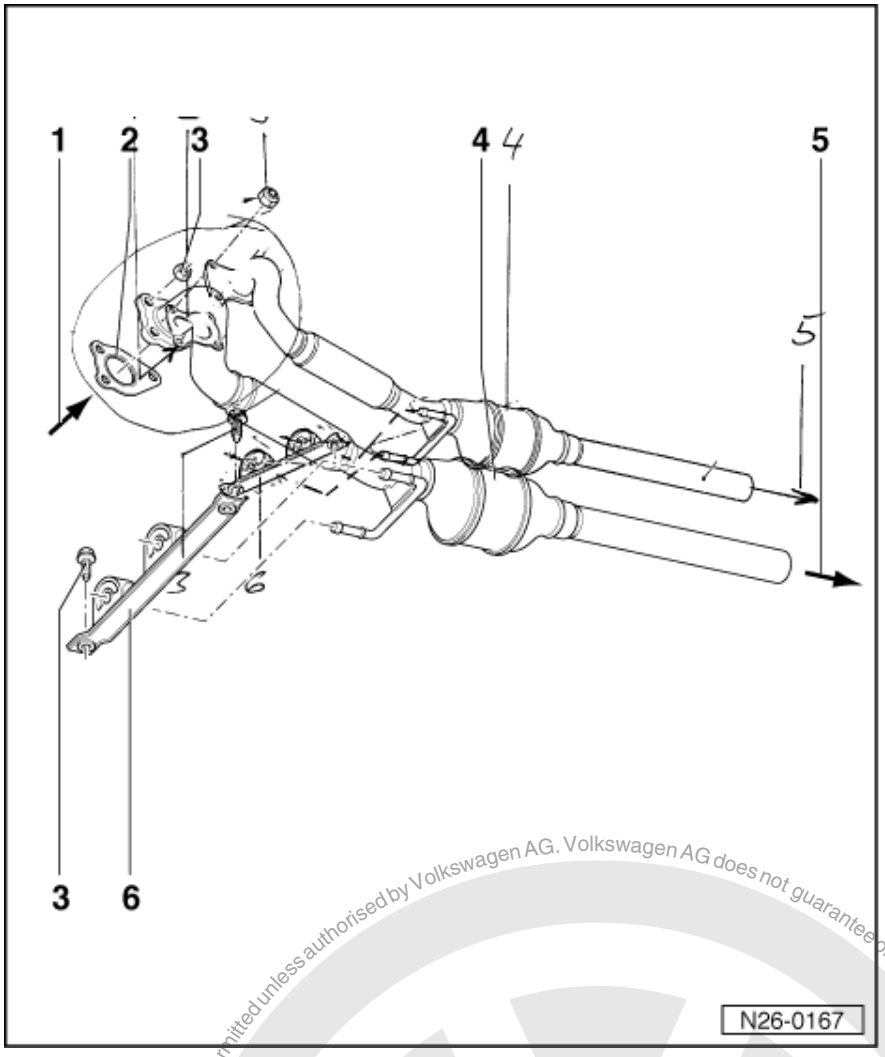

Engine code AFN

1 From turbocharger
2 Gasket
- Renew
3 25 Nm
4 Catalyst
5 To front silencer
6 Mounting

Protected by copyright. Copying for private or commercial purposes, in part or in whole, is not permitted unless authorised by Volkswagen AG. Volkswagen AG does not guarantee or accept any liability with respect to the correctness of information in this document. Copyright by Volkswagen AG.
satelettronica

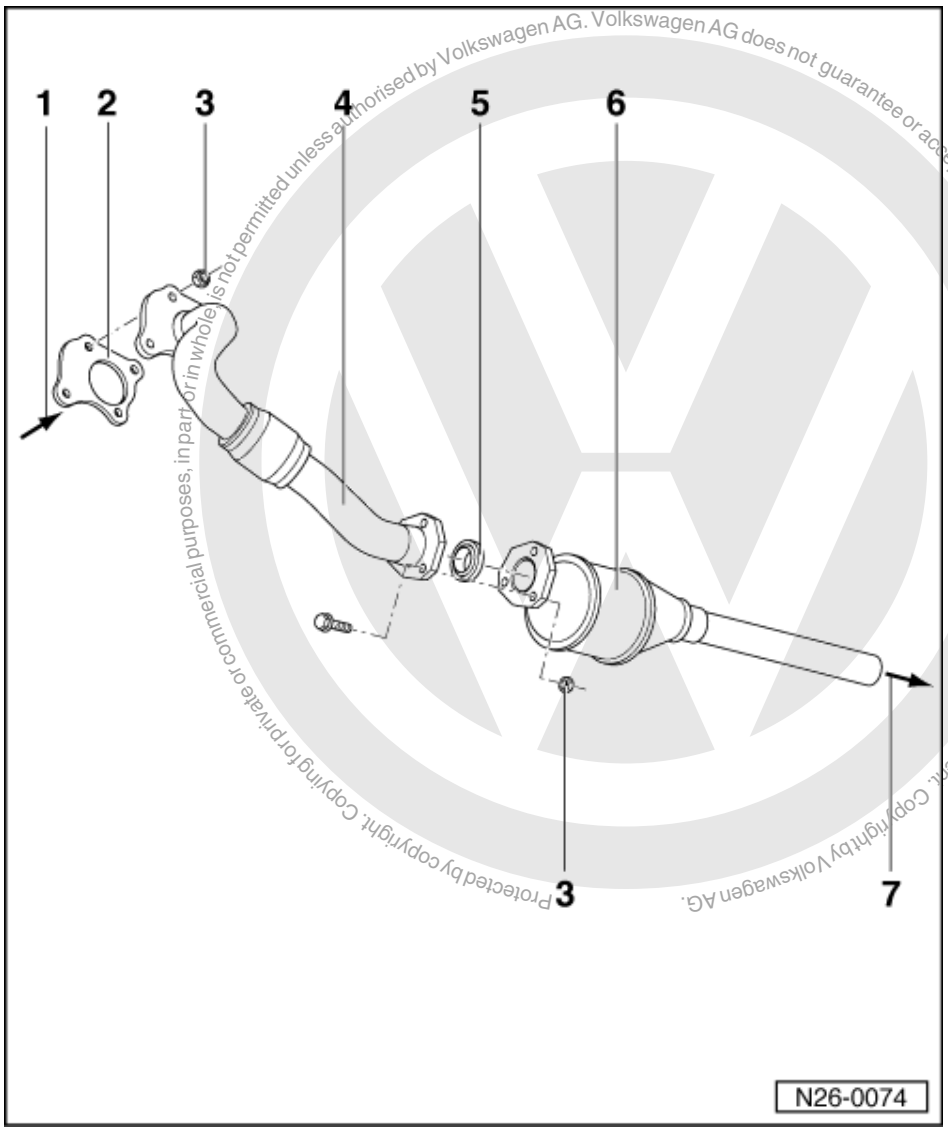

Protected by copyright. Copying for private or commercial purposes, in part or in whole is not permitted unless authorised by Volkswagen AG. Volkswagen AG does not guarantee or accept any liability with respect to the correctness of information in this document. Copyright by Volkswagen AG.

satelettronica

Engine code AHU

1 From turbocharger
2 Gasket
- Renew

3 25 Nm
4 Front exhaust pipe
5 Sealing ring
- Renew if damaged

6 Catalyst
7 To front silencer

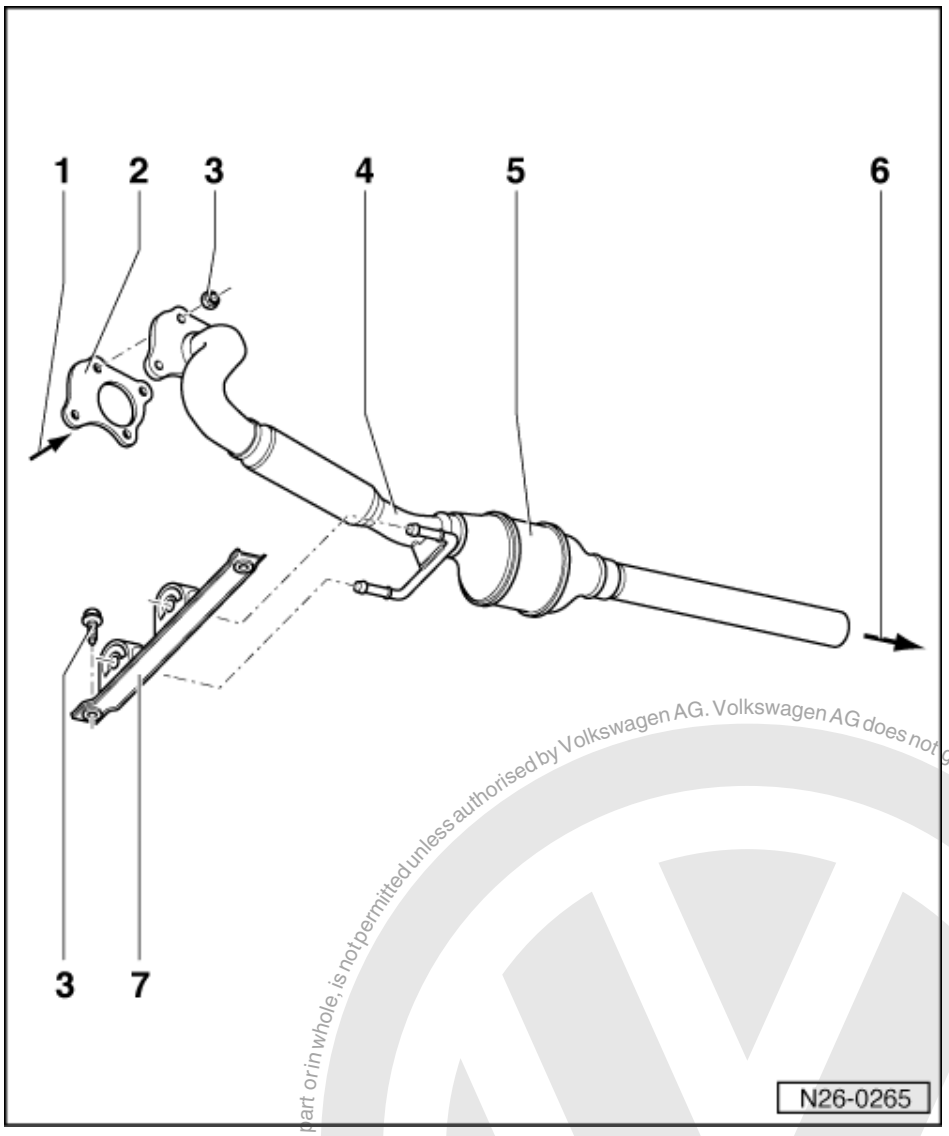

Engine code ALE

1 From turbocharger
2 Gasket
- Renew

3 25 Nm
4 Front exhaust pipe
5 Catalyst
6 To front silencer
7 Mounting

Protected by copyright. Copying for private or commercial purposes, in part or in whole, is not permitted unless authorised by Volkswagen AG. Volkswagen AG does not guarantee or accept any liability with respect to the correctness of information in this document. Copyright by Volkswagen AG.
satelettronica

1.3 - Exhaust manifold, front exhaust pipe and catalyst with its attachments

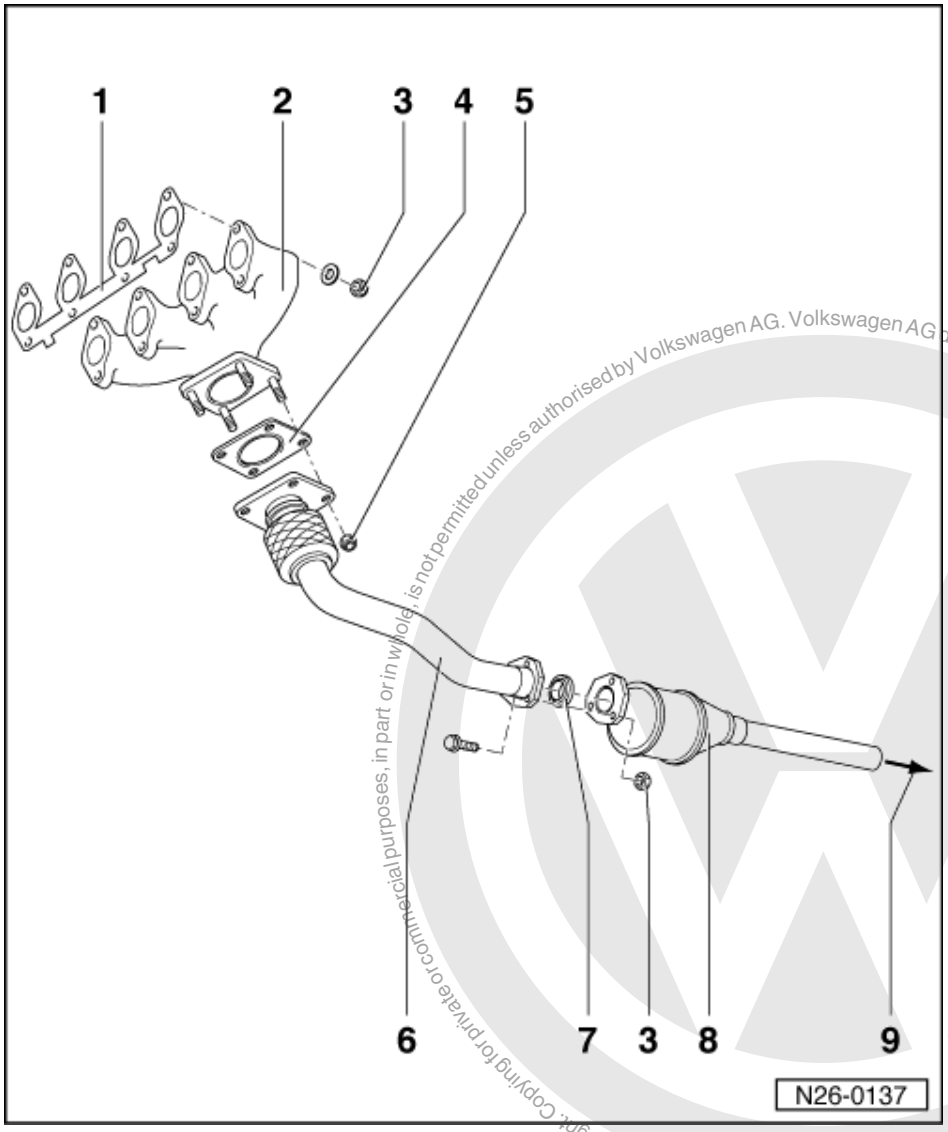

Protected by copyright. Copying for private or commercial purposes, in part or in whole, is not permitted unless authorised by Volkswagen AG. Volkswagen AG does not guarantee or accept any liability with respect to the correctness of information in this document. Copyright by Volkswagen AG.

satelettronica

Engine codes AEY, AHB, 1Y

1 Gasket
- Renew

2 Exhaust manifold
3 25 Nm
4 Gasket
- Renew

5 40 Nm
6 Front exhaust pipe
7 Sealing ring
- Renew

8 Catalyst
9 To front silencer

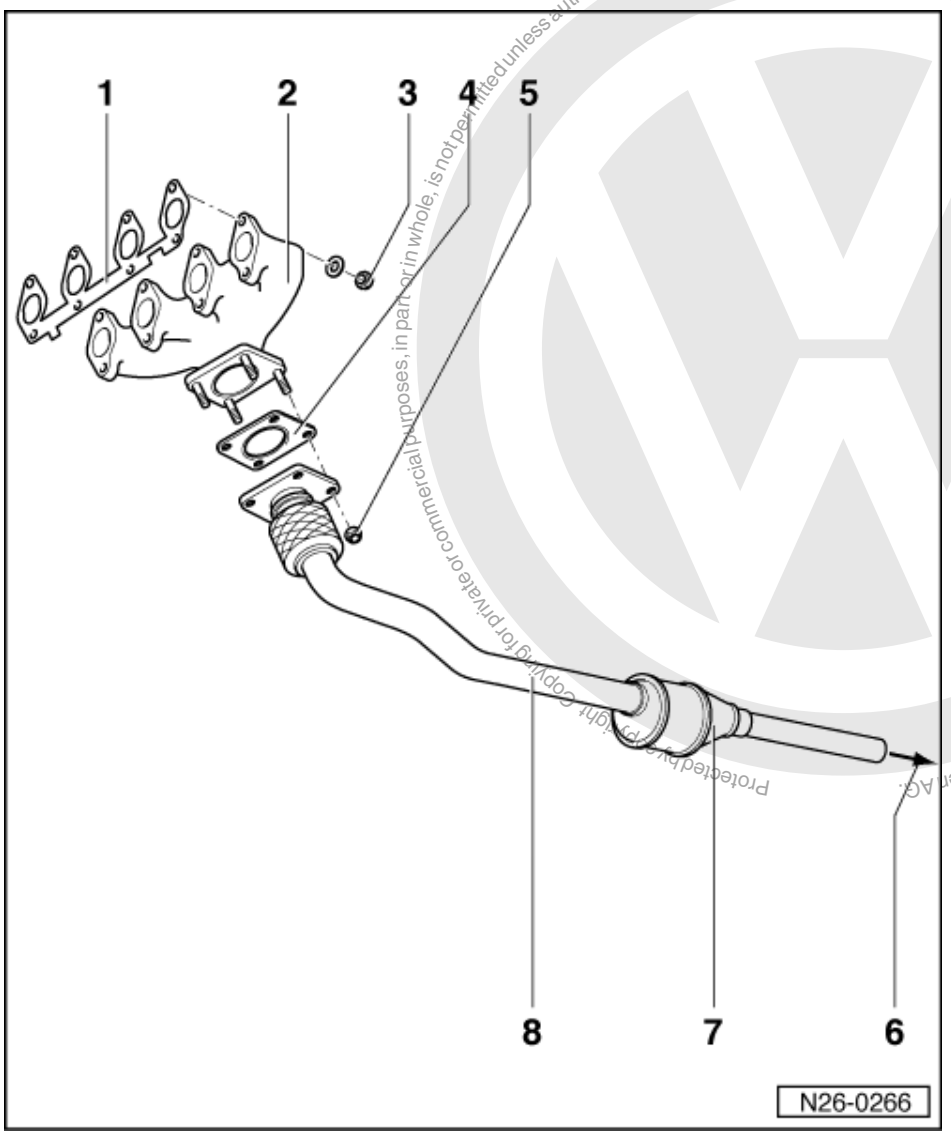

Engine code AKW

1 Gasket
- Renew

2 Exhaust manifold
3 25 Nm
4 Gasket
- Renew

5 40 Nm
6 To front silencer
7 Catalyst
8 Front exhaust pipe

Protected by Copyright. Copying for private or commercial purposes, in part or in whole, is not permitted unless authorised by Volkswagen AG. Volkswagen AG does not guarantee or accept any liability with respect to the correctness of information in this document. Copyright by Volkswagen AG.
satelettronica

1.4 - Silencer with mountings Caddy

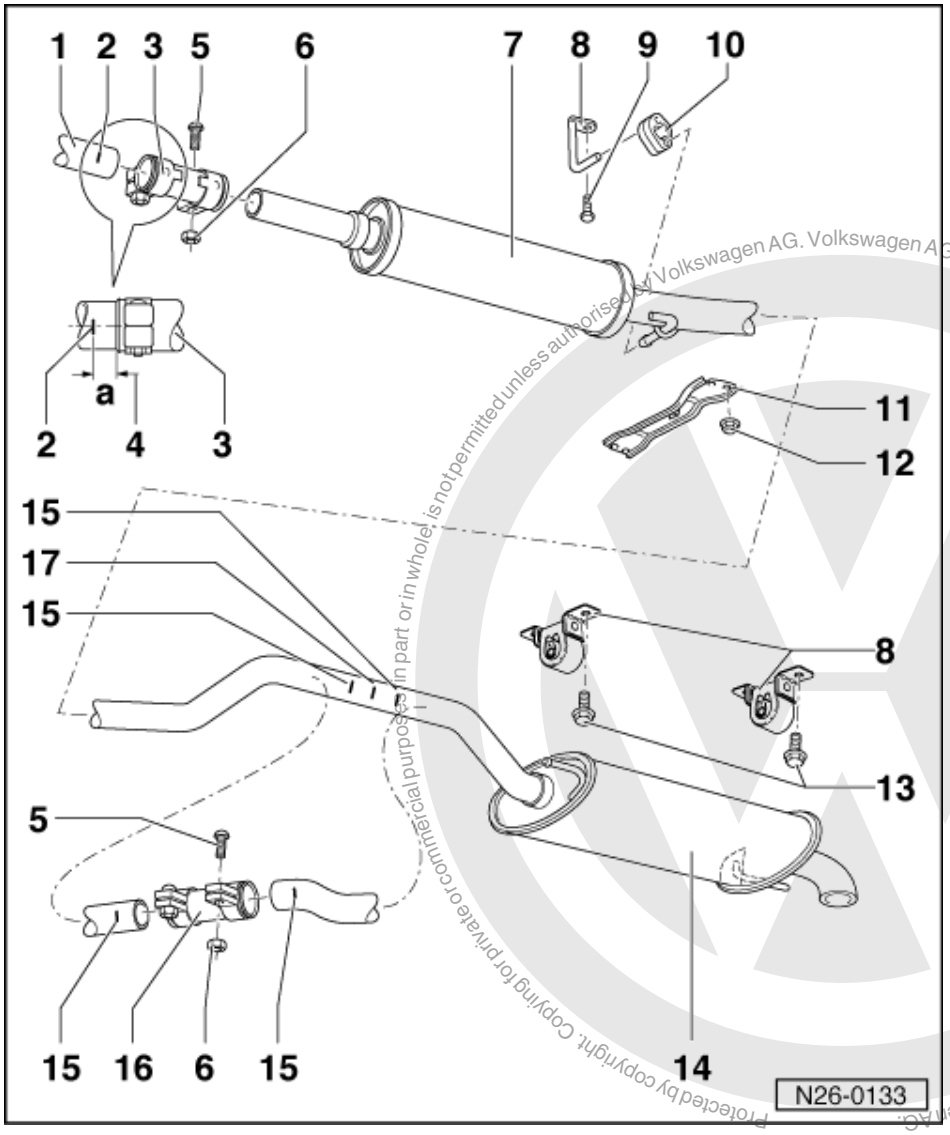

Silencer with mountings

Polo Classic, Polo Estate => Page 165 .

1 Catalyst
2 Marking
- Three times on circumference

3 Double clamp
4 Dimension-a- = ca. 5 mm
5 Carriage bolt
6 40 Nm
7 Front silencer1)
8 Mounting
9 25 Nm
10 Mounting

Protected by copyright. Copying for private or commercial purposes, in part or in whole, is not permitted unless authorised by Volkswagen AG. Volkswagen AG does not guarantee or accept any liability with respect to the correctness of information in this document. Copyright by Volkswagen AG.
satelettronica

- Renew if damaged

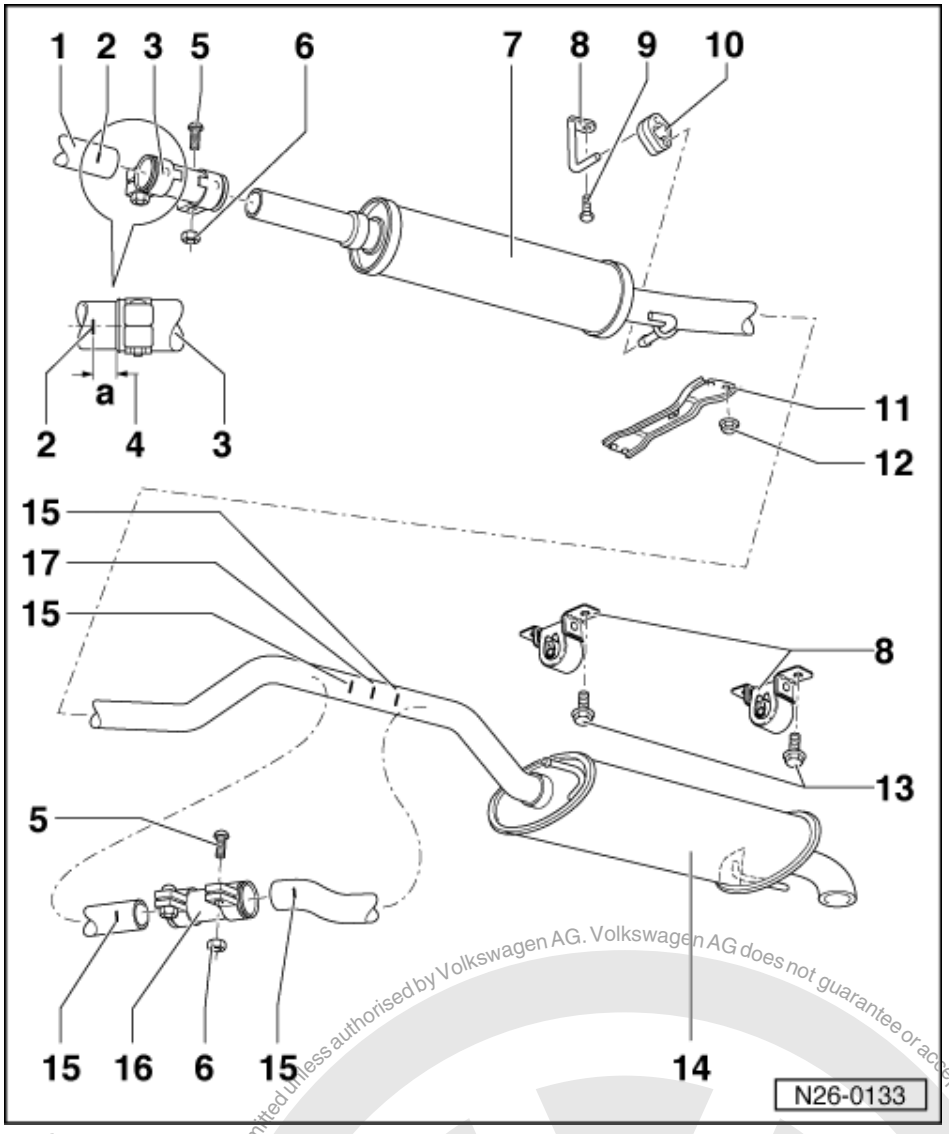

11 Connecting piece
12 15 Nm
13 20 Nm + 1/4 turn (90 °) further
14 Rear silencer1)
- Engine codes AEY, AHB, ALE with twin end pipes

15 Marking
- Three times on circumference
- Double clamp - 16 - for repairs

16 Repair double clamp
- Must be slid onto the markings - 15 -

17 Separating point
- For repair cases1)
- Marked by three impressions on circumference of connecting pipe

Protected by copyright. Copying for private or commercial purposes, in part or in whole, is not permitted unless authorised by Volkswagen AG. Volkswagen AG does not guarantee or accept any liability with respect to the correctness of information in this document. Copyright by Volkswagen AG.
satelettronica

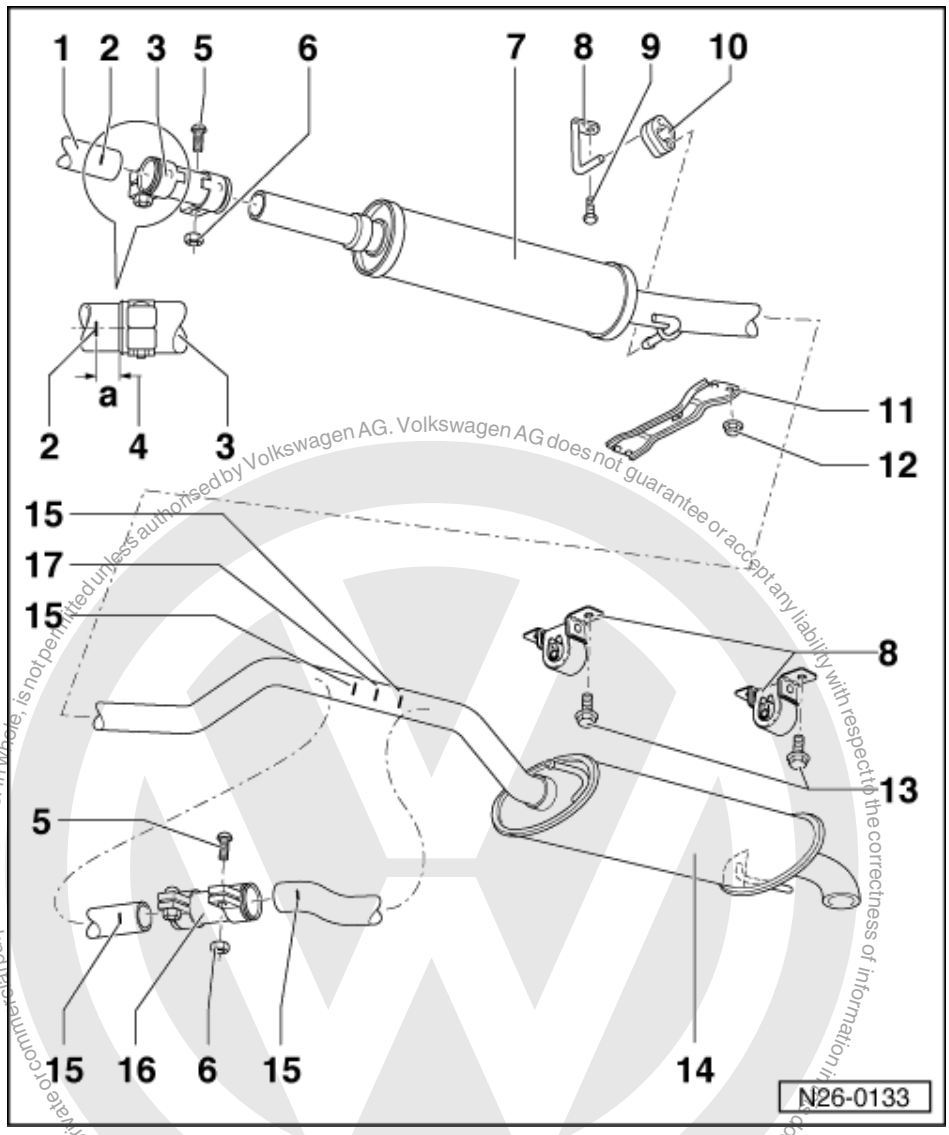

1) Front and rear silencers are installed as a single component as standard. In repair cases the front and rear silencers are supplied individually and a repair double clamp item 16 is supplied as a joint. Cut through connecting pipe at separating point - 17 - with a body saw e.g. V.A.G 1523.

Protected by copyright. Copying for private or commercial purposes, in part or in whole, is not permitted unless authorised by Volkswagen AG. Volkswagen AG does not guarantee or accept any liability with respect to the correctness of information in this document. Copyright by Volkswagen AG.

satelettronica

1.5 - Silencer with mountings Polo Classic, Polo Estate

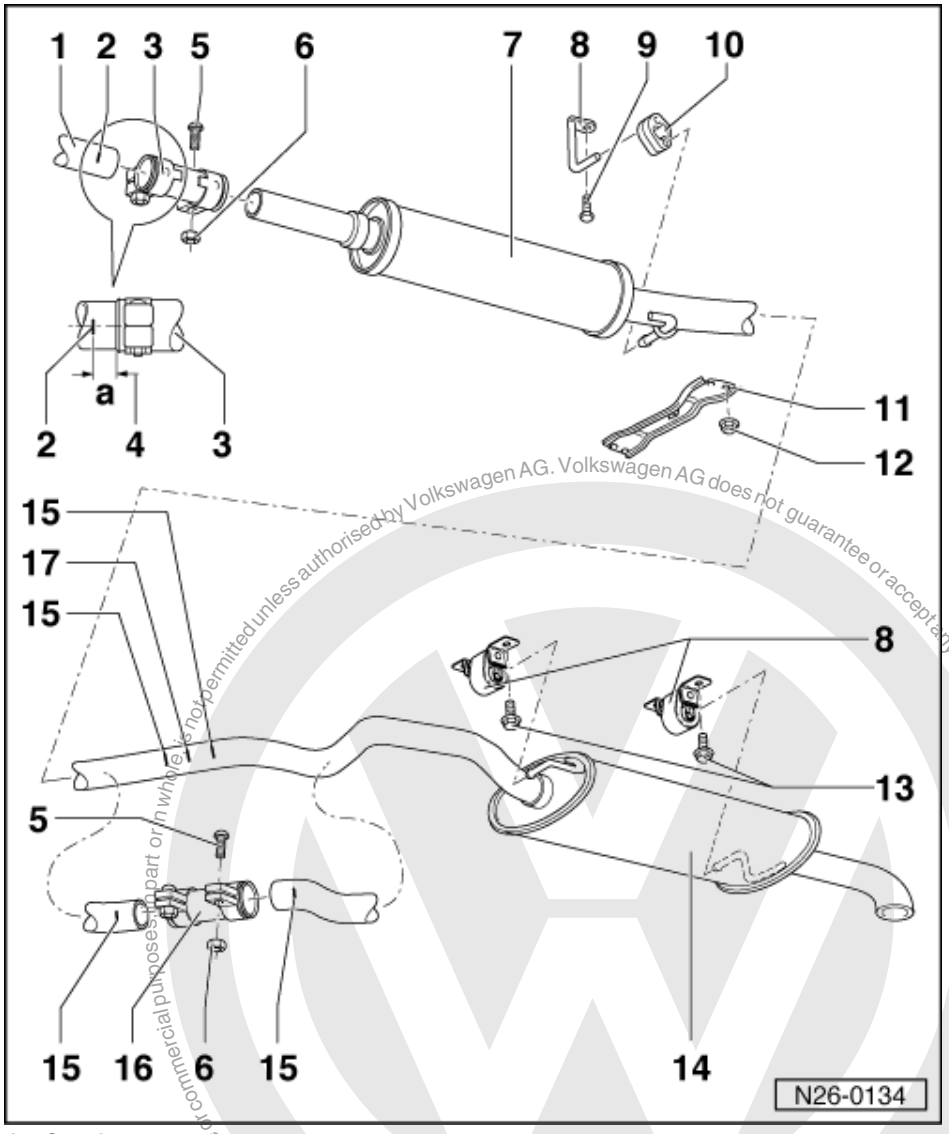

1 Catalyst
2 Marking
- Three times on circumference

3 Double clamp
4 Dimension-a- = ca. 5 mm
5 Carriage bolt
6 40 Nm
7 Front silencer1)
8 Mounting
9 25 Nm
10 Mounting
- Renew if damaged

Protected by copyright. Copyright by Volkswagen AG. Copying for private or commercial purposes, in part or in whole, is not permitted unless authorised by Volkswagen AG. Volkswagen AG does not guarantee or accept any liability with respect to the correctness of information in this document.
satelettronica

Protected by copyright. Copying for private or commercial purposes, in part or in whole, is not permitted unless authorised by Volkswagen AG. Volkswagen AG does not guarantee or accept any liability with respect to the correctness of information in this document. Copyright by Volkswagen AG.

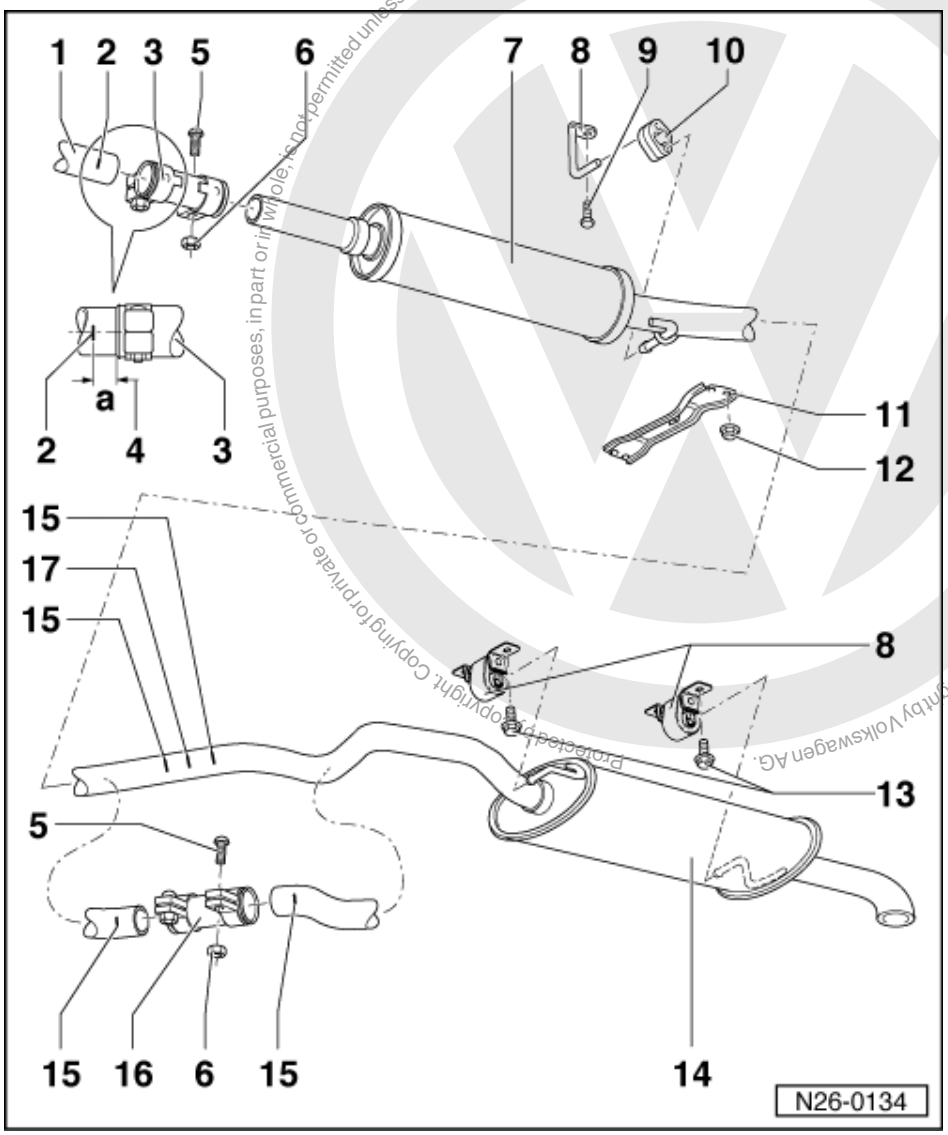

11 Connecting piece
12 15 Nm
13 20 Nm + 1/4 turn (90 °) further
14 Rear silencer1)
- Engine codes AEY, AFN, AHB, AHU, AKW, ALE with twin end pipes

15 Marking
- Three times on circumference
- Double clamp - 16 - for repairs

16 Repair double clamp
- Must be slid onto the markings - 15 -

17 Separating point
- For repair cases1)
- Marked by three impressions on circumference of connecting pipe

satelettronica

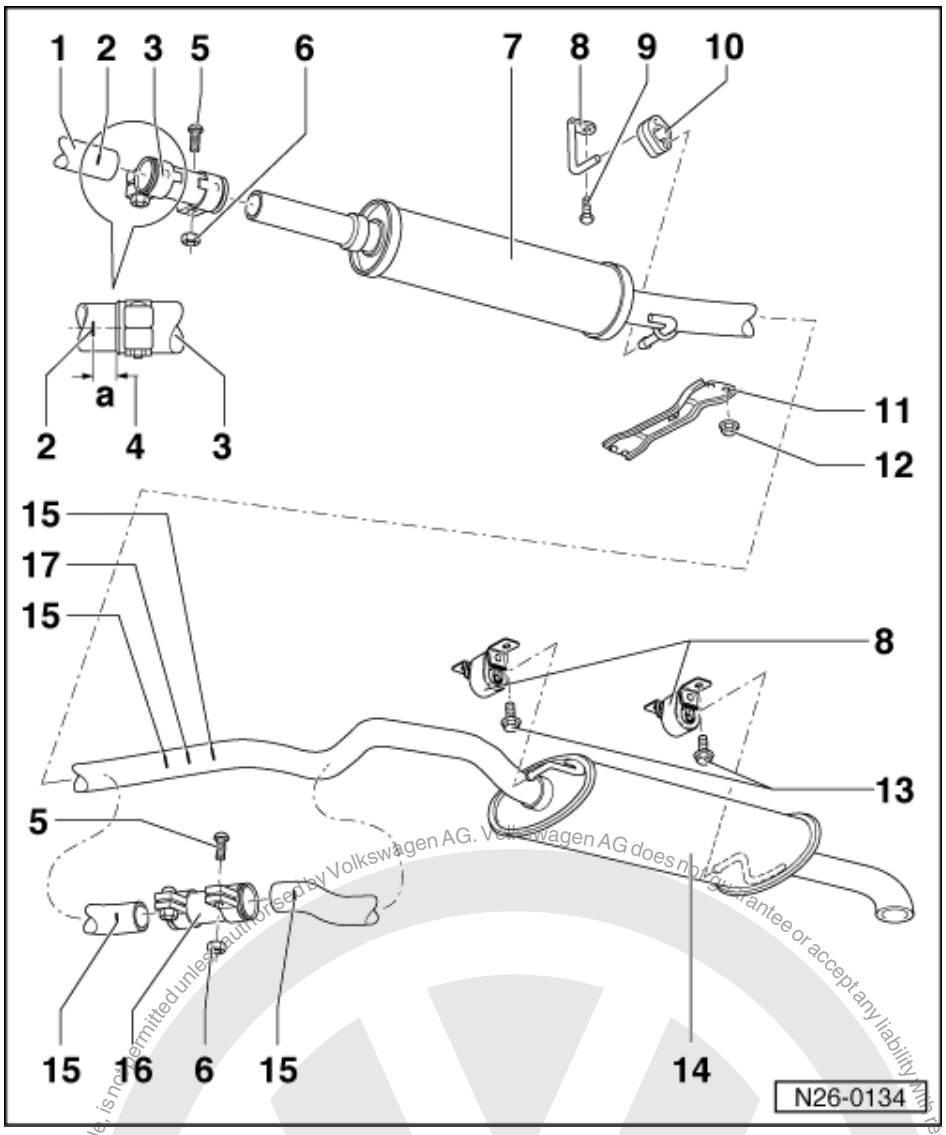

1) Front and rear silencers are installed as a single component as standard. In repair cases the front and rear silencers are supplied individually and a repair double clamp item 16 is supplied as a joint. Cut through connecting pipe at separating point - 17 - with a body saw e.g. V.A.G 1523.

2 - Exhaust gas recirculation system, engine codes 1Y, AEY, AHB, AKW

2.1 - Exhaust gas recirculation system, engine codes 1Y, AEY, AHB, AKW

Engine code 1Y

Notes:

- The activation of the exhaust gas recirculation system is undertaken by automatic glow period control unit (J179) via exhaust gas recirculation 2-way valve (N161 or N18) to exhaust gas recirculation valve.
- The exhaust gas recirculation is switched off above approx. 1000 m by the altitude correction switch in the automatic glow period control unit.
- The engine speed cut-out is via the automatic glow period automatic control unit (J179). The exhaust gas recirculation is switched on at engine speeds over 800 rpm and is switched off at engine speeds over 3200 rpm.
- During acceleration the exhaust gas recirculation is switched off for 2 seconds.

satelettronica

- Renew self-locking nuts.

Engine codes AEY, AHB, AKW

Notes:

- The function/control of the exhaust gas recirculation system is undertaken by diesel direct injection system control unit (J248) via exhaust gas recirculation valve (N18) to exhaust gas recirculation valve.
- The cone shaped plunger in the mechanical exhaust gas recirculation valve ensures that various cross sectional openings are possible at different plunger lifts.
- Pulsed control makes every conceivable valve position possible.
- Renew self-locking nuts.

2.2 - Removing and installing parts of exhaust gas recirculation system

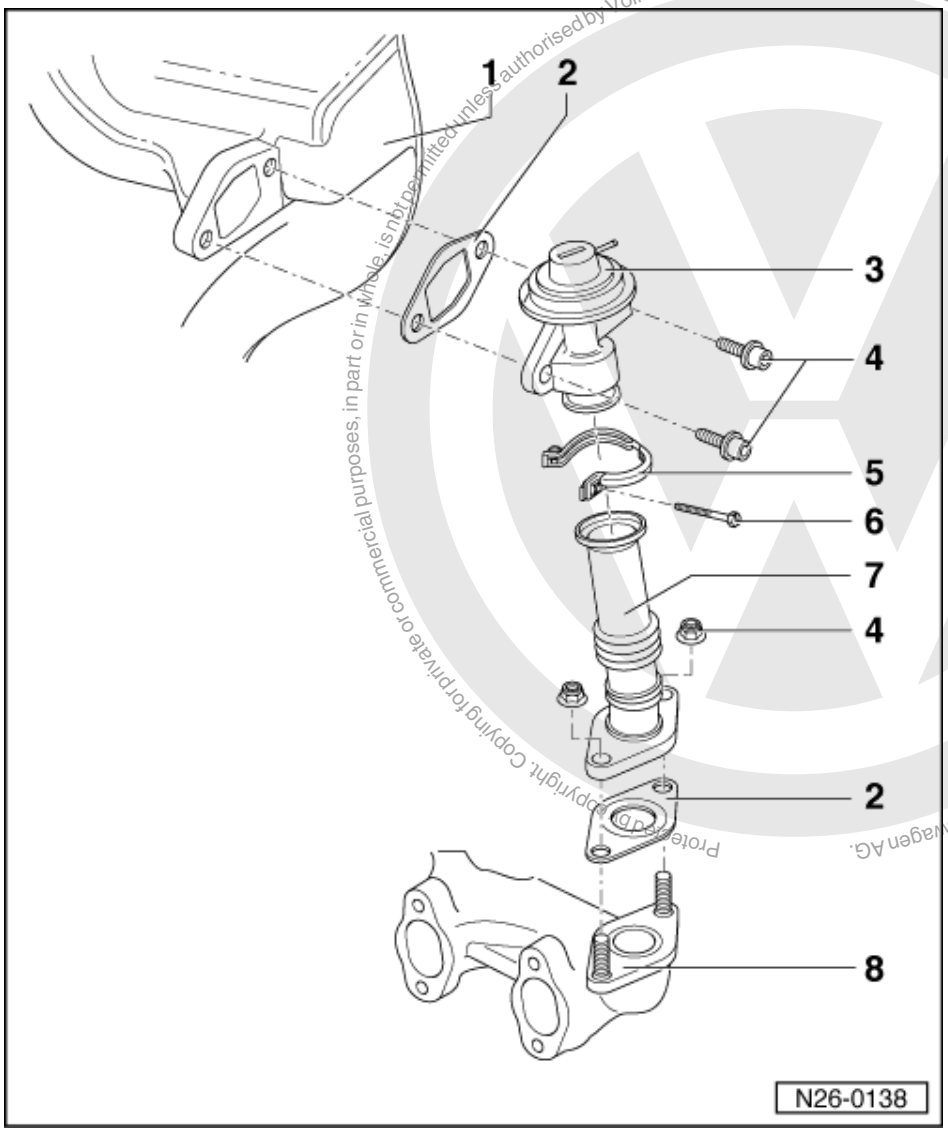

1 Intake manifold

2 Gasket
- Renew

3 Exhaust gas recirculation valve (mechanical)
- Checking => Page 169
- Checking activation

4 25 Nm

Protected copyright. Copying for private or commercial purposes, in part or in whole, is not permitted unless authorised by Volkswagen AG. Volkswagen AG does not guarantee or accept any liability with respect to the correctness of information in this document. Copyright by Volkswagen AG.
satelettronica

5 Clamp
6 10 Nm
7 Connecting pipe
8 Exhaust manifold

2.3 - Checking exhaust gas recirculation valve

Special tools, workshop equipment, testers, measuring instruments and auxiliary items required

- Hand vacuum pump V.A.G 1390

Test sequence

- Pull vacuum hose off (mechanical) exhaust gas recirculation valve.
- Connect hand vacuum pump V.A.G 1390 to valve.

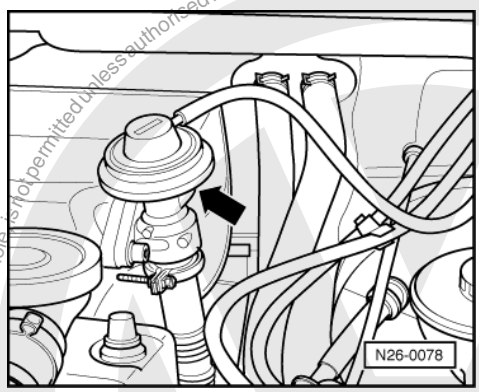

- -> Operate pump.
  Membrane must move in direction of
  vacuum connection (establish by feeling from below -arrow-).
- Pull hand vacuum pump hose off (mechanical) exhaust gas recirculation valve.
  The valve must clearly be heard to close (membrane moves
  in direction of exhaust manifold).

2.4 - Checking exhaust gas recirculation

(Engine code 1Y)

Engine codes AEY, AHB, AKW => Page 170 .

Special tools, workshop equipment, testers, measuring instruments and auxiliary items required

- Hand multimeter V.A.G 1526 or multimeter V.A.G 1715
- Diode test lamp V.A.G 1527
- Adapter set V.A.G 1594

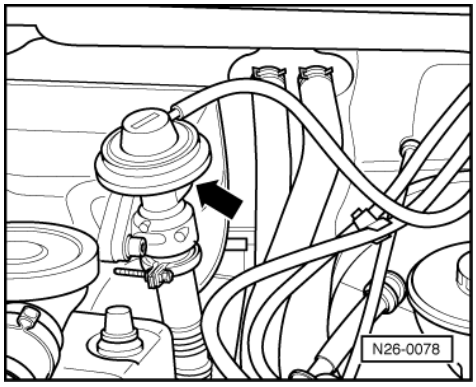

satelettronica

- Current flow diagram

Functional check

- Start engine and run at idling speed.
- -> Exhaust gas recirculation valve membrane is pulled towards vacuum hose connector (establish by feeling from below -arrow-). Exhaust gas is supplied.

- Increase engine speed to above 3200 rpm, the exhaust gas recirculation is switched off when exceeding 3200 rpm (membrane moves towards exhaust gas manifold).

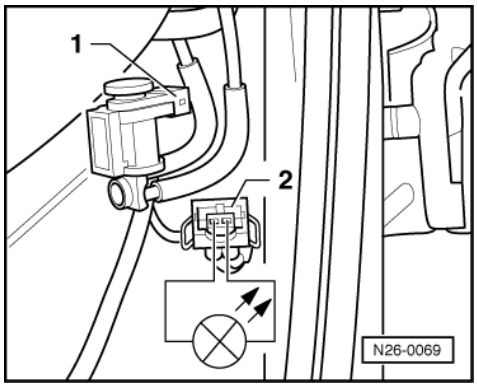

If exhaust gas recirculation does not work as described:

Check exhaust gas recirculation valve control (N18) as follows:

- Switch off ignition
- -> Pull 2 pin connector -2- off EGR valve (N18) -1-.
- Connect diode test lamp V.A.G 1527 using aux. cables from V.A.G 1594 to connector contacts.
- Start engine and run at idling speed.
  LED must light up
- Increase speed to over 3200 rpm.
  LED must go out

LED does not light up or go out as described:

- Check wiring according to current flow diagram, or renew automatic glow period control unit (J179) as necessary.

LED lights up and goes out as described:

- Check exhaust gas recirculation valve => Page 169 .
- Check exhaust gas recirculation valve (N18) => Page 173 .

Engine codes AEY, AHB, AKW

Special tools, workshop equipment, testers, measuring instruments and auxiliary items required

- Test box V.A.G 1598/18 or V.A.G 1598/22
- Hand multimeter V.A.G 1526 or multimeter V.A.G 1715
- Diode test lamp V.A.G 1527
- Adapter set V.A.G 1594
- Current flow diagram

Test sequence

- Switch off ignition.

Protected by copyright. Copying for private or commercial purposes, in part or in whole, is not permitted unless authorised by Volkswagen AG. Volkswagen AG does not guarantee or accept any liability with respect to the correctness of information in this document. Copyright by Volkswagen AG.
satelettronica

- Pull connector off exhaust gas recirculation valve.

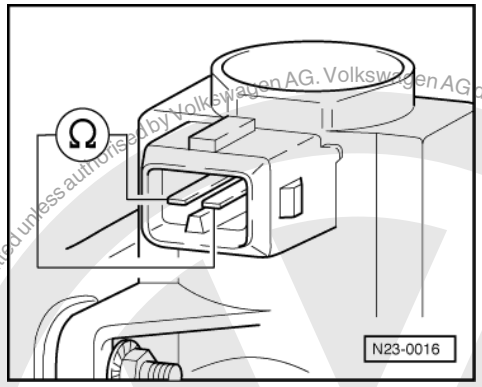

- -> Measure resistance at valve.
  Specification: 14 ... 18 ω

If the specification is not obtained:

- Replace EGR valve (N18).

Note:

At room temperature the resistance lies in the the lower tolerance region and at operating temperature in upper tolerance region.

If the specification is obtained:

Vehicles with 68-pin control unit

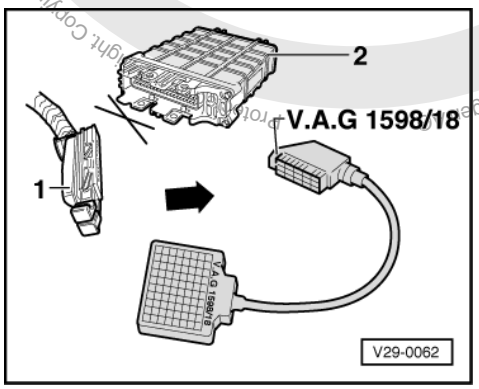

- -> Connect test box V.A.G 1598/18 to control unit wiring loom.

Copyright by Volkswagen AG. Volkswagen AG does not guarantee or accept any liability with respect to the correctness of information in this document. Copyright by Volkswagen AG. Copying for private or commercial purposes, in part or in whole, is not permitted unless authorised by Volkswagen AG.
satelettronica

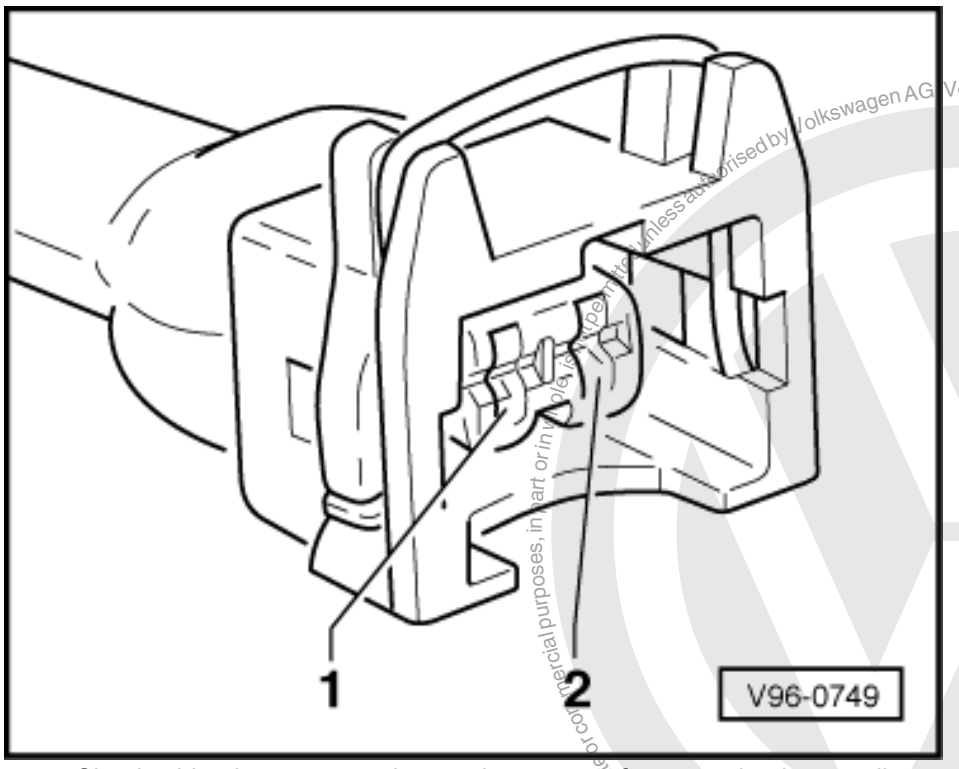

- -> Check wiring between test box and connector for open circuit according to current flow diagram.
  Contact 1+ socket 68
  Contact 2+ socket 25
  Wire resistance: max. 1.5 ω
- Additionally check wires for short to one another, to vehicle earth and to battery positive.
  Specification: ∞ω

Vehicles with 80-pin control unit

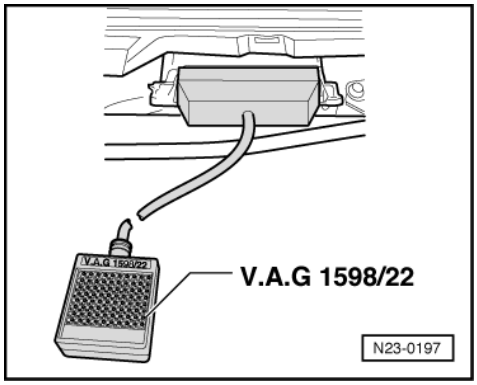

- -> Connect test box V.A.G 1598/22 to control unit wiring harness.

Protected by copyright. Copying for private or commercial purposes, in part or in whole, is not permitted unless authorised by Volkswagen AG. Volkswagen AG does not guarantee or accept any liability with respect to the correctness of information in this document. Copyright by Volkswagen AG.
satelettronica

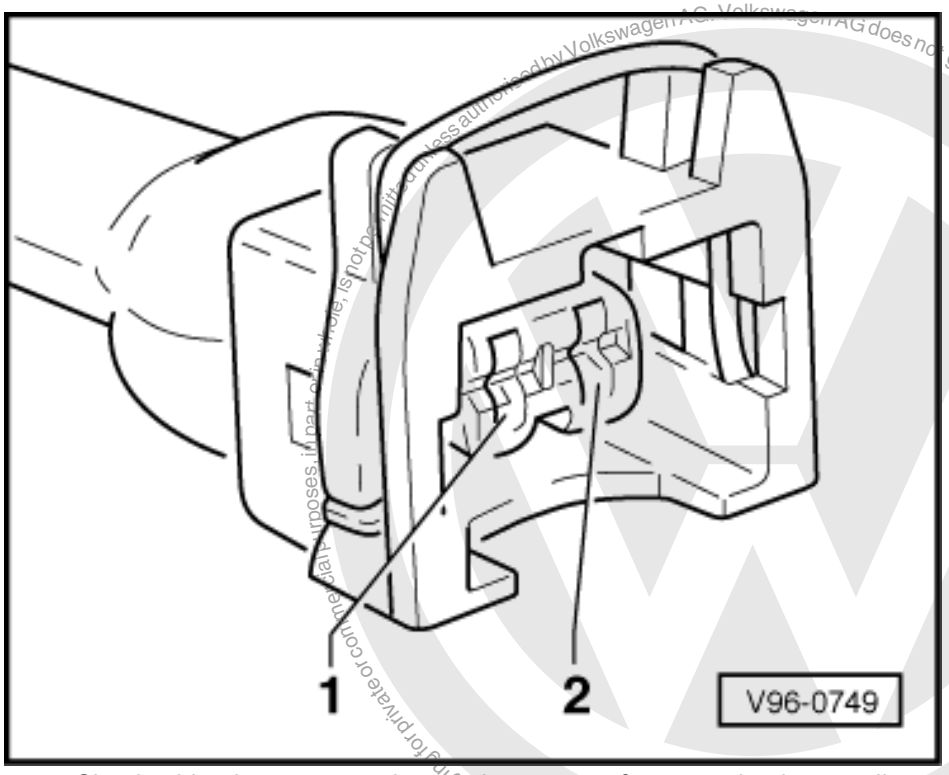

- -> Check wiring between test box and connector for open circuit according to current flow diagram.
  Contact 1+ socket 2+28
  Contact 2+ socket 29
  Wire resistance: max. 1.5 ω
- Additionally check wires for short to one another, to vehicle earth and to battery positive.
  Specification: ∞ω

Continuation for all vehicles
If no fault is detected in the wiring:
- Renew Diesel direct injection system control unit (J248).

=> Repair group 23; Renewing engine control unit, coding and matching; Renewing engine control unit Renewing engine control unit, coding and matching Renewing engine control unit

2.5 - Checking exhaust gas recirculation valve (N18)

(Engine code 1Y)
Special tools, workshop equipment, testers, measuring instruments and auxiliary items required
- Hand vacuum pump V.A.G 1390

Test sequence

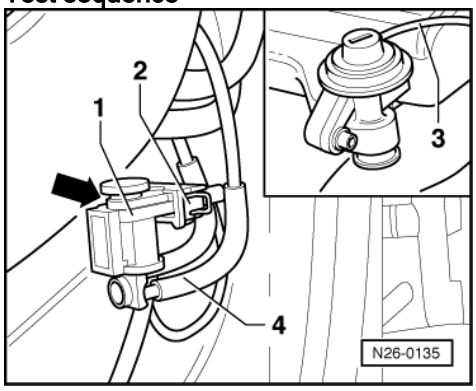

satelettronica

- -> Pull vacuum hose -4- off exhaust gas recirculation valve (N18) -1- and connect hand vacuum pump V.A.G 1390.
- Pull vacuum hose -3- off exhaust gas recirculation valve.
- Pull 2 pin connector -2- off exhaust gas recirculation valve (N18)-1-.
- Start engine and run at idling speed.
- Operate hand vacuum pump.
  A vacuum must build up.
- Reconnect 2 pin connector -2- to exhaust gas recirculation valve (N18) -1-. Vacuum at hand vacuum pump must
  release rapidly.

3 - Exhaust gas recirculation system, engine codes AFN, AHU, ALE

3.1 - Exhaust gas recirculation system, engine codes AFN, AHU, ALE

Notes:

- The activation of the exhaust gas recirculation system is undertaken by diesel direct injection system control unit (J248) via exhaust gas recirculation valve (N18) to exhaust gas recirculation valve.
- Checking exhaust gas recirculation valve (N18).

=> Repair group 01; Final control diagnosis; Performing final control diagnosis Final control diagnosis Performing final control diagnosis

- The cone shaped plunger in the mechanical exhaust gas recirculation valve ensures that various cross sectional openings are possible at different plunger lifts.
- Pulsed control makes every conceivable valve position possible.
- Renew self-locking nuts.

Exhaust gas recirculation system, engine codes:

- AHU => Page 175
- AFN, ALE => Page 177

Protected by copyright. Copying for private or commercial purposes, in part or in whole, is not permitted unless authorised by Volkswagen AG. Volkswagen AG does not guarantee or accept any liability with respect to the correctness of information in this document. Copyright by Volkswagen AG.
satelettronica

3.2 - Removing and installing parts of exhaust gas recirculation system

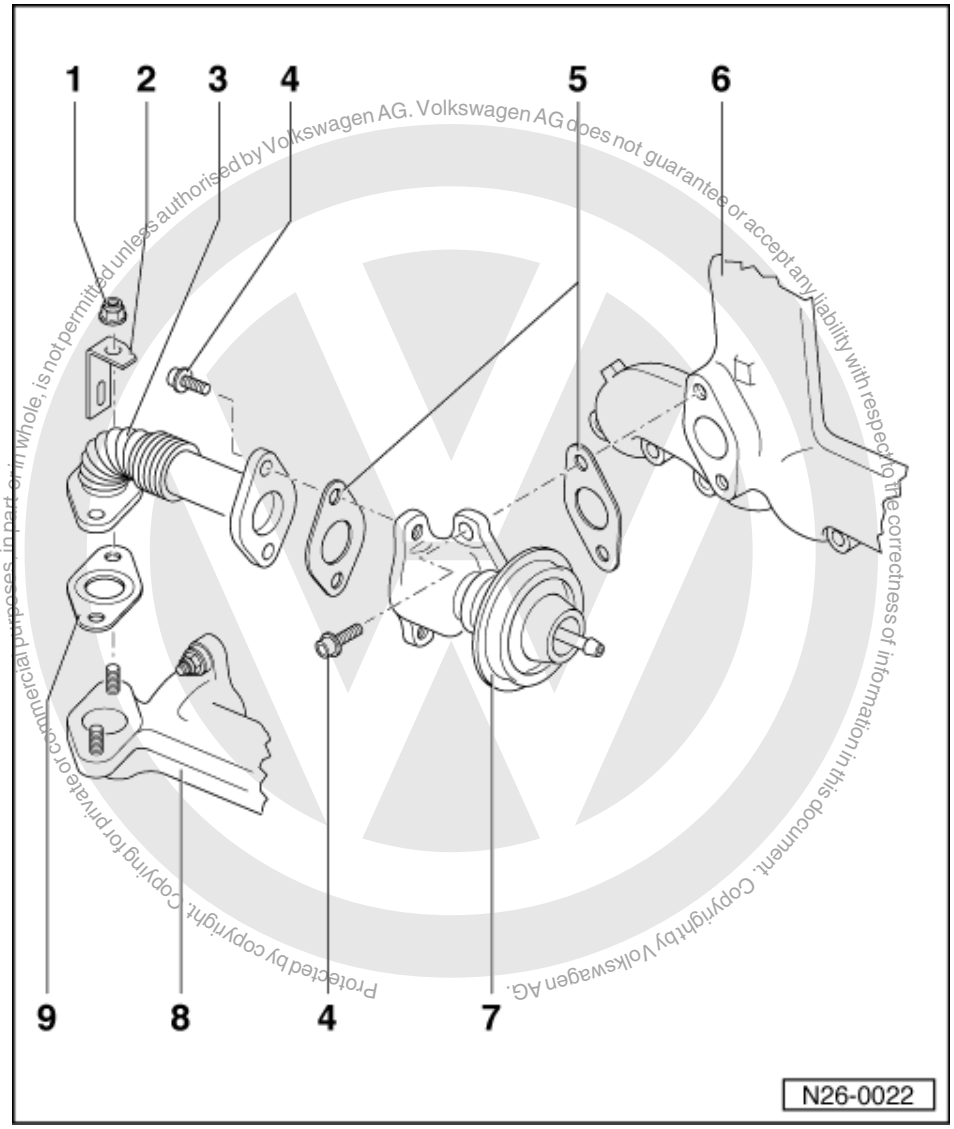

Protected by copyright. Copying for private or commercial purposes, in part or in whole, is not permitted unless authorised by Volkswagen AG. Volkswagen AG does not guarantee or accept any liability with respect to the correctness of information in this document. Copyright by Volkswagen AG.

satelettronica

Engine code AHU

1 25 Nm
2 Bracket
- For turbocharger oil supply pipe

3 Connecting pipe
- When installing, just nip all bolts (parts must be just free to move), then tighten stress free

4 25 Nm
5 Gasket
- Renew

6 Intake manifold

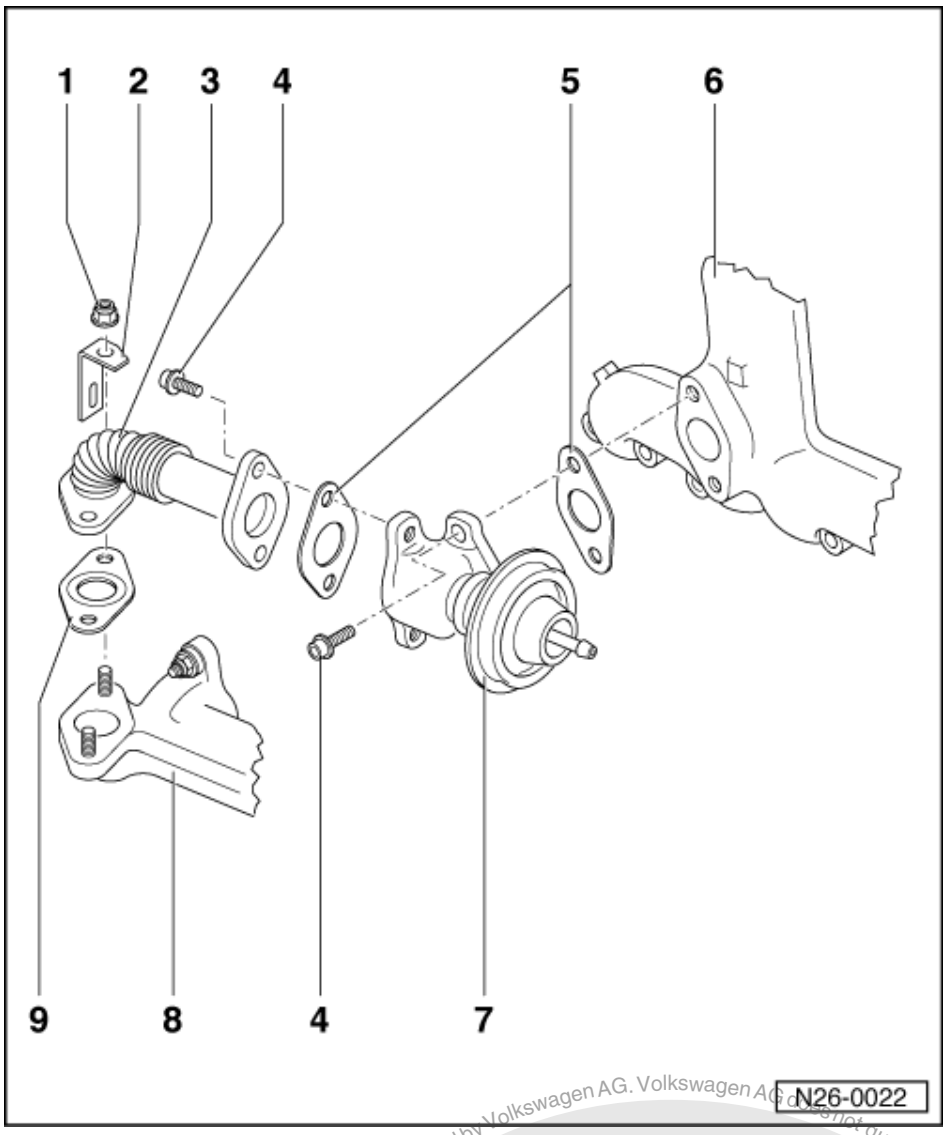

7 Exhaust gas recirculation valve (mechanical)
- Checking => Page 180
- Checking activation

=> Repair group 01; Final control diagnosis; Performing final control diagnosis Final control diagnosis Performing final control diagnosis

8 Exhaust manifold
9 Gasket
- Renew

Protected by copyright. Copying for private or commercial purposes, in part or in whole, is not permitted unless authorised by Volkswagen AG. Volkswagen AG does not guarantee or accept any liability with respect to the correctness of information in this document. Copyright by Volkswagen AG.

satelettronica

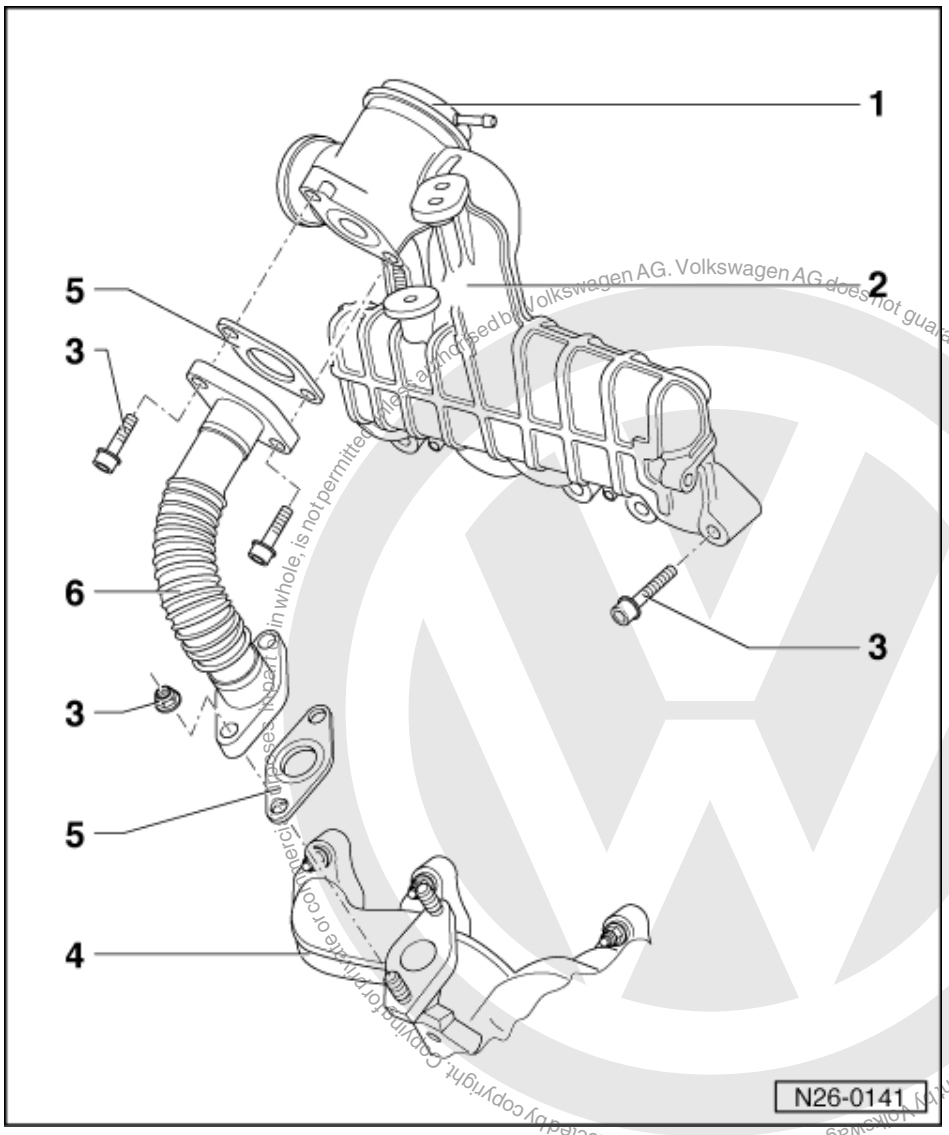

Protected by copyright. Copyright by Volkswagen AG. Volkswagen AG does not guarantee or accept any liability with respect to the correctness of information in this document. Copyright by Volkswagen AG.

satelettronica

Engine codes AFN, ALE

1 Exhaust gas recirculation valve
- Component part of throttle valve housing
- Can only be replaced together with intake connecting flange
- Checking => Page 180
- Checking activation

=> Repair group 01; Final control diagnosis; Performing final control diagnosis Final control diagnosis Performing final control diagnosis

2 Intake manifold
- With exhaust gas recirculation valve

3 25 Nm

4 Exhaust manifold

5 Gasket
- Renew

6 Connecting pipe

3.3 - Vacuum hose connection diagram

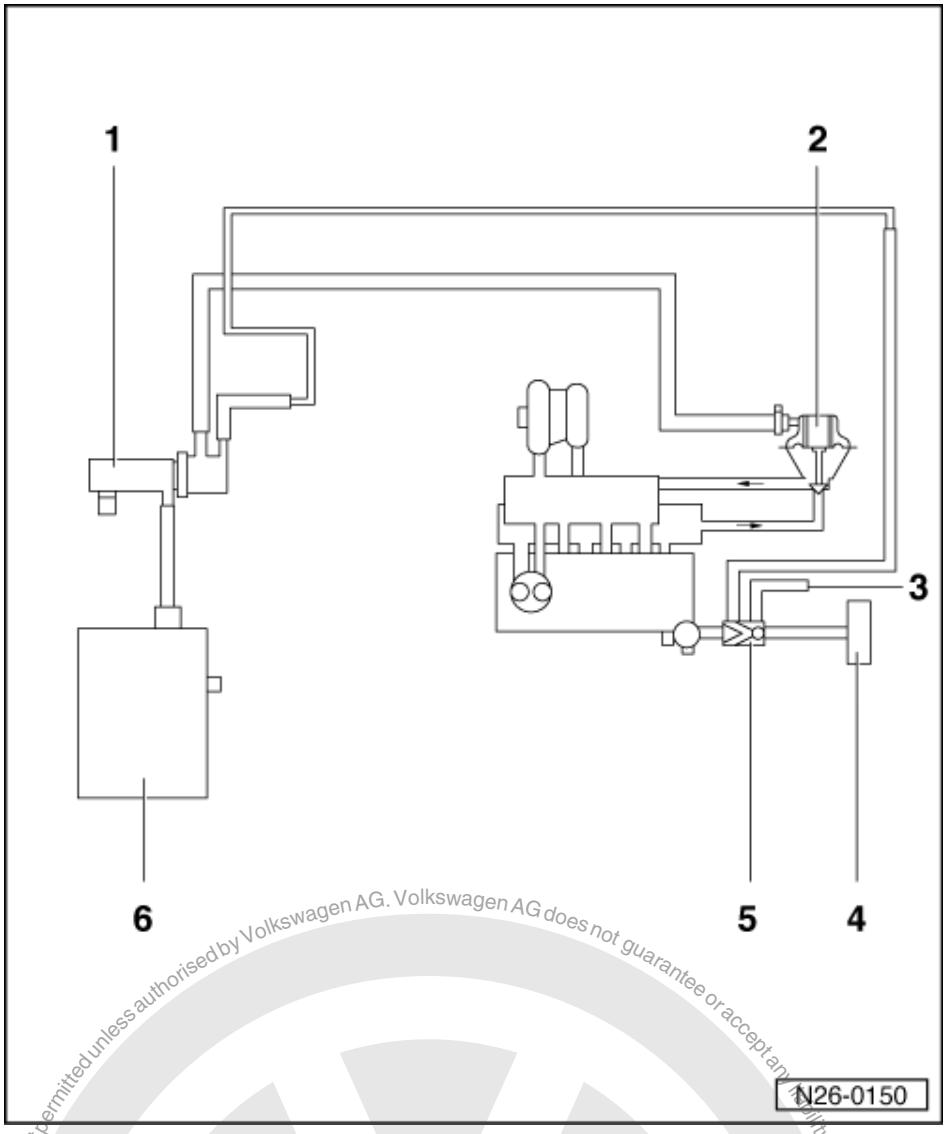

Engine codes AHU, ALE

1 Exhaust gas recirculation valve (N18)
2 Exhaust gas recirculation valve (mechanical)
3 Vacuum connection for vehicles with air conditioner

=> Repair group 87; Air conditioner; air conditioner with manual adjustment Air conditioner air conditioner with manual adjustment

4 Brake servo
5 Non-return valve
6 Air cleaner

Protected by copyright. Copying for private or commercial purposes, in part or in whole, not permitted unless authorised by Volkswagen AG. Volkswagen AG does not guarantee or accept any liability with respect to the correctness of information in this document. Copyright by Volkswagen AG.
satelettronica

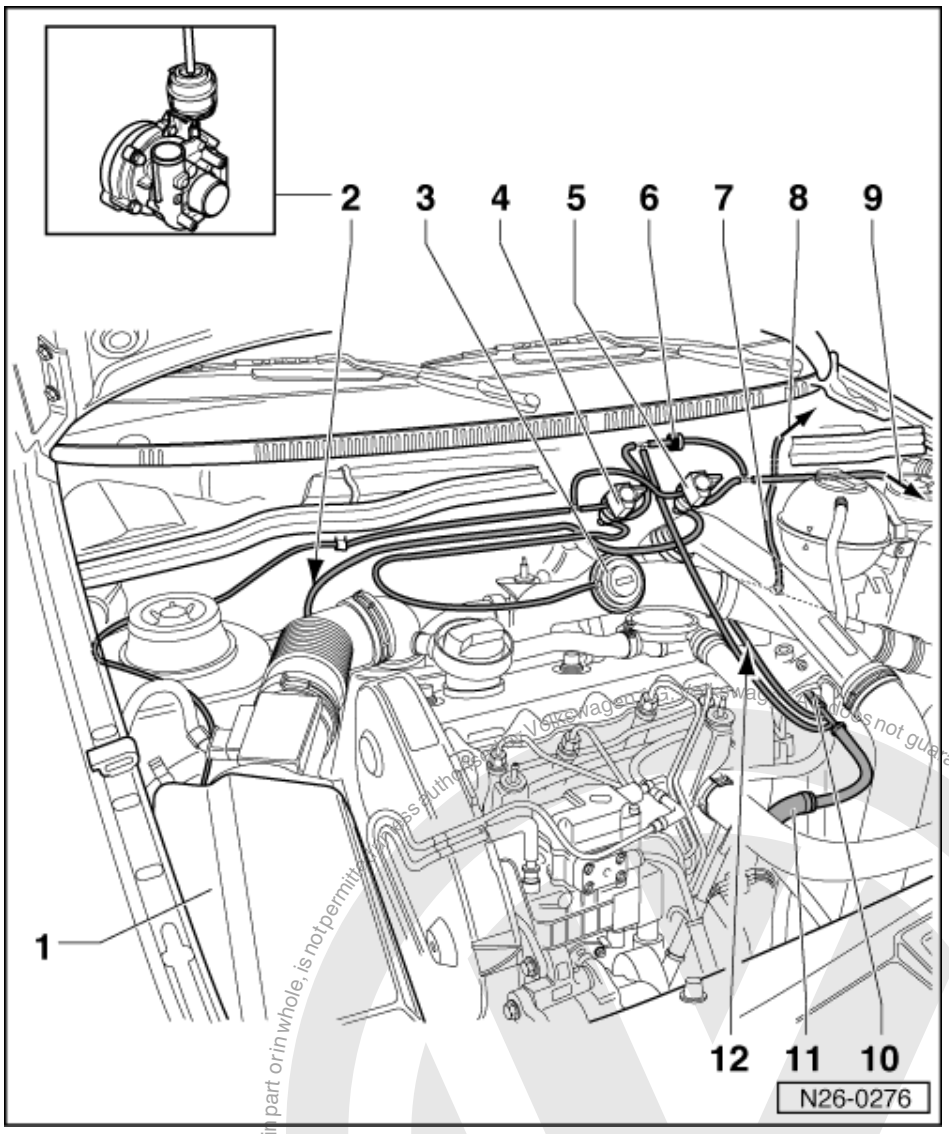

Engine code AFN

1 Air cleaner
2 Pressure unit
- For charge pressure control

3 Exhaust gas recirculation valve (mechanical)
4 Exhaust gas recirculation valve (N18)
5 Solenoid valve for charge pressure control (N75)
6 Non-return valve
- White connection to charge pressure control solenoid valve -item 5 - and to vacuum reservoir

7 Intake manifold/charge air cooler vacuum hose
8 To Diesel direct injection system control unit (J248)

satelettronica

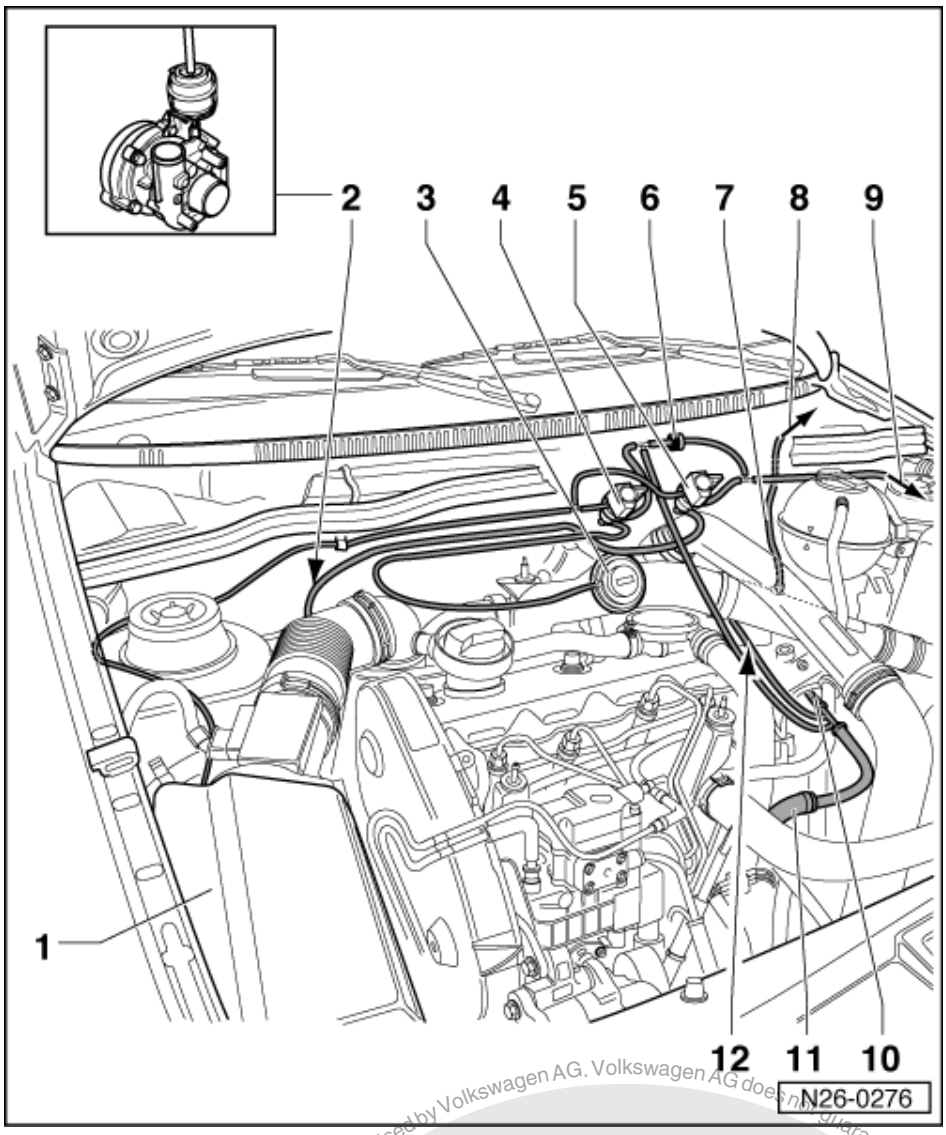

9 To vacuum reservoir
- In wheel housing

10 Non-return valve

11 To vacuum pump

12 To air conditioning system
- Vacuum connection for vehicles with air conditioning

=> Repair group 87; Air conditioning with manual control Air conditioning with manual control

3.4 - Checking exhaust gas recirculation valve (mechanical)

Special tools, workshop equipment, testers, measuring instruments and auxiliary items required

- Hand vacuum pump V.A.G 1390

Engine code AHU

Test sequence

- Pull vacuum hose off (mechanical) exhaust gas recirculation valve.

satelettronica
Protected by copyright. Copying for private or commercial purposes, in part or in whole, is not permitted unless authorised by Volkswagen AG. Volkswagen AG does not guarantee or accept any liability with respect to the correctness of information in this document. Copyright by Volkswagen AG.

- Connect hand vacuum pump V.A.G 1390 to valve.

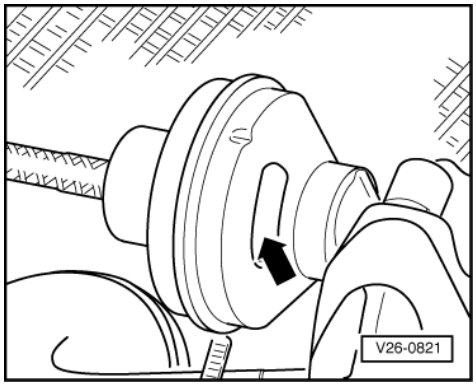

- -> Operate pump.
  The membrane rod must move towards vacuum connection (observe membrane rod via opening -arrow-).
- Pull hand vacuum pump hose of exhaust gas recirculation valve.
  The valve must clearly heard to close (membrane rod moves towards intake manifold).

Engine codes AFN, ALE

- Remove engine cover.
- Disconnect connecting pipe between charge air cooler and intake connecting flange at intake connecting flange.

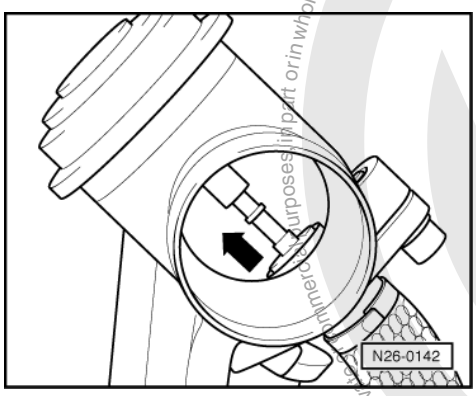

- Pull vacuum hose off (mechanical) exhaust gas recirculation valve.
- Connect hand vacuum pump V.A.G 1390 to valve.
- -> Operate pump and observe membrane rod.

  The membrane rod must move in direction of arrow.

- Pull hand vacuum pump hose off exhaust gas recirculation valve.

  The membrane rod must move back against the direction of arrow to its original position.

3.5 - Checking exhaust gas recirculation

Special tools, workshop equipment, testers, measuring instruments and auxiliary items required

- Fault reader V.A.G 1551 or vehicle system tester V.A.G 1552 with cable V.A.G 1551/3
- Test box V.A.G 1598/18
- Hand multimeter V.A.G 1526 or multimeter V.A.G 1715
- Adapter set V.A.G 1594

satelettronica

- Current flow diagram

Engine code AHU

Engine codes ALE, AFN =>Page 183

The exhaust gas recirculation function can be checked with the help of final control element test and at the same time calling-up measured value block 003. To do this it is required to activate the control element "Exhaust gas recirculation (EGR) valve -N18" and then exiting the final control element test with "C" key. Using this sequence the EGR valve continues to be pulsed so that with the help of measured value block 003 (display zone 3) the extreme values for the EGR (air mass meter) can be read.

Test sequence

- With engine running at idle speed, connect fault reader V.A.G 1551 (V.A.G 1552) and select engine electronics control unit with the "Address word" 01:

=> Repair group 01; Self-diagnosis; Connecting fault reader V.A.G 1551 and selecting engine electronics control unit Self-diagnosis Connecting fault reader V.A.G 1551 and selecting engine electronics control unit

-> Indicated on display:

```
Rapid data transfer      HELP
Select function XXX
```

- Press keys 0 and 3 for the function "Final control diagnosis".

-> Indicated on display:

```
Rapid data transfer      Q
03 Final control diagnosis
```

Note:

The individual control elements are only activated for 30 seconds. Within this period various work sequences must be carried out with the fault reader unit as well as reading the measured values. Therefore read the following work sequence first to become conversant with the procedure.

- Confirm input with Q key.

-> Indicated on display:

```
Final control diagnosis
Commencement of injection valve -N108
```

- Press the ⇒key.

-> Indicated on display:

```
Final control diagnosis
Exhaust gas recirculation valve -N18
```

- Press C key.
- Press keys 0 and 8 for the function "Read measured value block" and confirm entry with Q key.

-> Indicated on display:

```
Read measured value block      HELP
Input display group number XXX
```

- Press keys 0, 0 and 3 for "Display group number 3" and confirm entry with Q key.

```
Read measured value block 3      "
840 rpm      272 mg/H      268 mg/H      54 %
```

-> Indicated on display:

The displays in display zones 3 and 4 must fluctuate within following control range:

Protected by copyright. Copying for private or commercial purposes, in part or in whole, is not permitted unless authorised by Volkswagen AG. Volkswagen AG does not guarantee or accept any liability with respect to the correctness of information in this document. Copyright by Volkswagen AG.
satelettronica

- Specification display zone 3
  Lower range 230...310 mg/stroke
  Upper range 360...480 mg/stroke
- Specification display zone 4
  Lower range 2...5%
  Upper range 90...95%

Because the fault reader display is slow the displayed figures vary greatly. Therefore only ensure that the upper and lower range figures in display zones 3 and 4 are obtained. This means only regard the minimum or maximum values.

If the specifications are not obtained:

- Check mechanical exhaust gas recirculation valve
  => Page 180
- Check vacuum hoses => Page 178 .
- Check exhaust gas recirculation valve (N18)
  => Page 184 .

Engine codes AFN, ALE

The exhaust gas recirculation function is checked in function 04 (basic setting). Using this method the exhaust gas recirculation valve is pulsed every 10 seconds, so that the extreme values for the EGR (air mass meter) measured value block 003 can be read in display zone 3.

Test sequence

- With engine running at idle speed, connect fault reader V.A.G 1551 (V.A.G 1552) and select engine electronics control unit with the "Address word" 01:

=> Repair group 01; Self-diagnosis; Connecting fault reader V.A.G 1551 and selecting engine electronics control unit Self-diagnosis Connecting fault reader V.A.G 1551 and selecting engine electronics control unit

-> Indicated on display:

```
Rapid data transfer      HELP
Select function XX
```

- Press keys 0 and 4 for the function "Introduction of basic setting" and confirm entry with Q key.

-> Indicated on display:

```
Basic setting      HELP
Input display group number XXX
```

- Press keys 0, 0 and 3 for "Display group number 3" and confirm entry with Q key.

-> Indicated on display:
(1...4 = Display zones)

```
System in basic setting 3
900 rpm          EGRn.active      500 mg/
H     0%
```

The display in display zone 2 must fluctuate every 10 secs. between EGR active and EGRn.active.
The displays in display zones 3 and 4 must fluctuate within following control range:

Note:

If a constant value of 550 mg/H is indicated in display zone 3, check air mass meter.

=> Rep.-Gr. 23; Checking components and function; Checking exhaust gas recirculation and air mass meter function Checking components and function Checking exhaust gas recirculation and air mass meter function

EGRn.active

Protected by copyright. Copying for private or commercial purposes, in part or in whole, is not permitted unless authorised by Volkswagen AG. Volkswagen AG does not guarantee or accept any liability with respect to the correctness of information in this document. Copyright by Volkswagen AG.
satelettronica

- Specification display zone 3
  320...550 mg/lift
- Specification display zone 4
  0...5%

EGR.active

- Specification display zone 3
  180...340 mg/lift
- Specification display zone 4
  95...100 %

If the specifications are not obtained:

- Check mechanical exhaust gas recirculation valve
  => Page 180
- Check vacuum hoses => Page 178 .
- Check EGR valve (N18) as follows:

Checking exhaust gas recirculation valve (N18)

- Press the ⇒key.

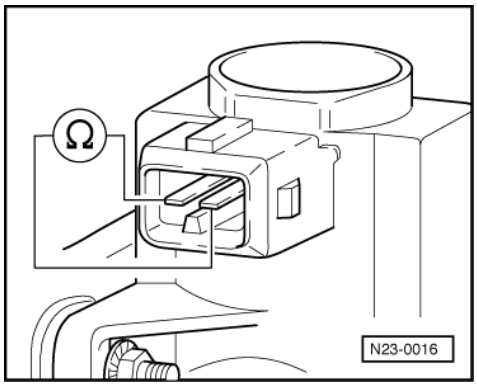

- Press keys 0 and 6 for the "End data transfer" function and confirm input with the Q key.
- Switch off ignition.
- Pull connector off valve.
- -> Measure resistance of valve -N18.
  Specification: 14 ... 18 ω

If the specification is not obtained:

- Replace EGR valve (N18).

Protected by copyright. Copying for private or commercial purposes, in part or in whole, is not permitted unless authorised by Volkswagen AG. Volkswagen AG does not guarantee or accept any liability with respect to the correctness of information in this document. Copyright by Volkswagen AG.
satelettronica

Note:

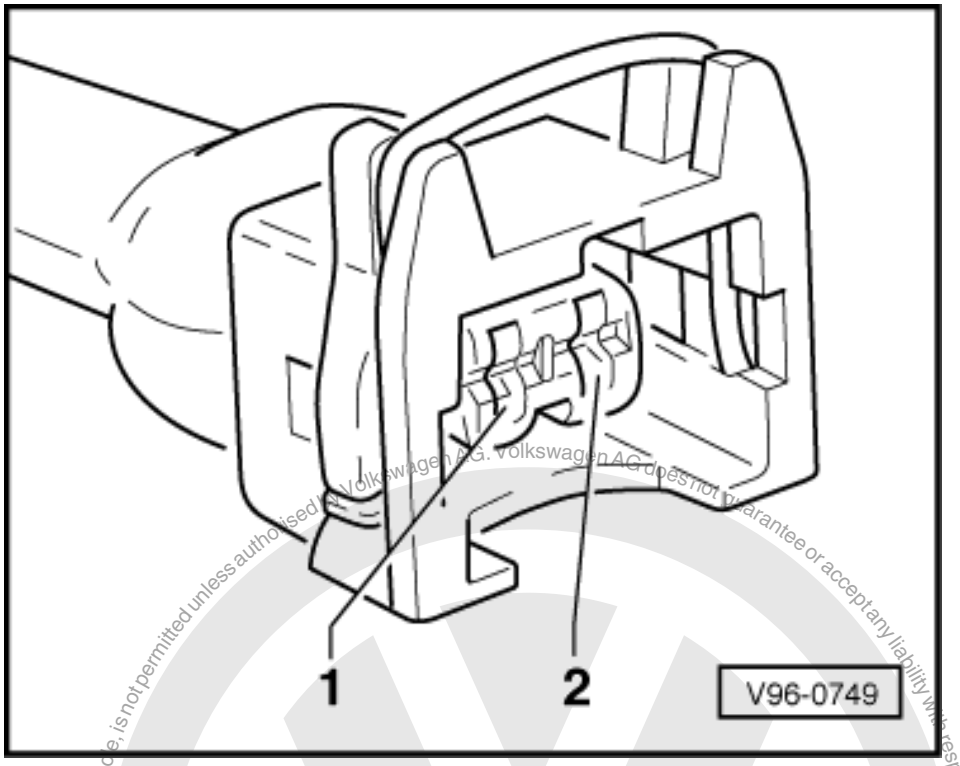

At room temperature the resistance is in the area of the lower tolerance and when engine is at operating temperature in region of upper tolerance.

- Pull connector off valve.
- -> Connect hand multimeter V.A.G 1526 with aux. cables from V.A.G 1594 to connector contact 1 and engine earth.
- Switch ignition on.

- Specification:
  approx. battery voltage

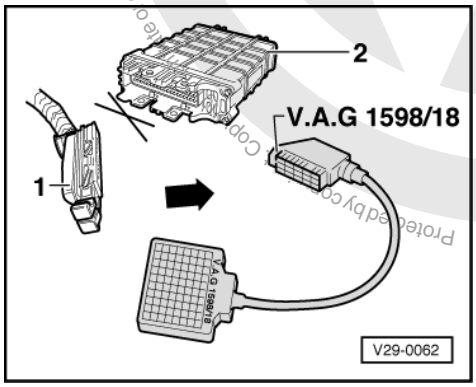

If the specification is not obtained:

- Check wiring connection to valve -N18.

Checking wiring connection to exhaust gas recirculation valve (N18)

- Switch off ignition.

Copyright by Volkswagen AG. Volkswagen AG does not guarantee or accept any liability with respect to the correctness of information in this document. Copyright by Volkswagen AG. Protected by copyright. Copying for private or commercial purposes, in whole or in part, is not permitted unless authorised by Volkswagen AG.
satelettronica

- -> Connect test box V.A.G 1598/18 to control unit wiring loom.

The following wiring connections are to be checked for open circuits and/or short to positive or negative.

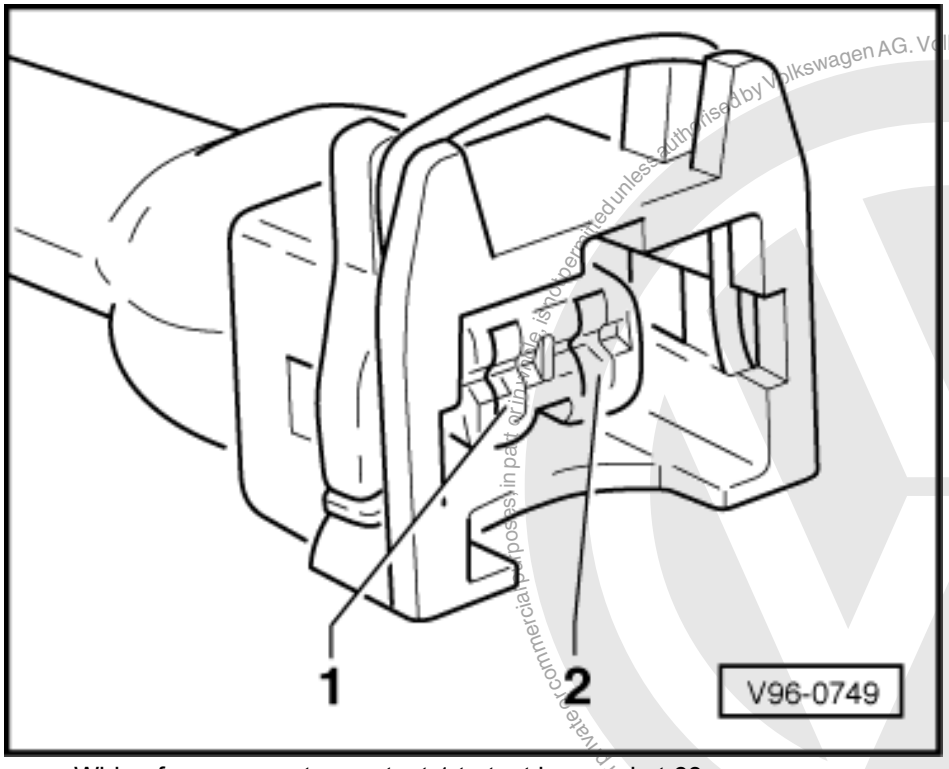

- -> Wiring from connector contact 1 to test box socket 68.
- Wiring from connector contact 2 to test box socket 25.
- Rectify any open/short circuit as necessary.

- If neither an open or short circuit exists, renew Diesel direct injection system control unit.

=> Repair group 23; Renewing engine control unit, coding and matching; Renewing engine control unit Renewing engine control unit, coding and matching Renewing engine control unit

Protected by copyright. Copyright by Volkswagen AG. Volkswagen AG does not guarantee or accept any liability with respect to the correctness of information in this document. Copyright by Volkswagen AG. Private or commercial purposes in part or in whole, is not permitted unless authorised by Volkswagen AG.
satelettronica